SHARP SERVICE MANUAL

CODE: 00ZERA460VSME

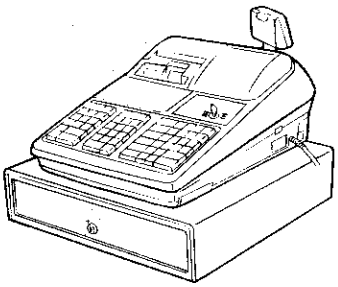

ER-A460

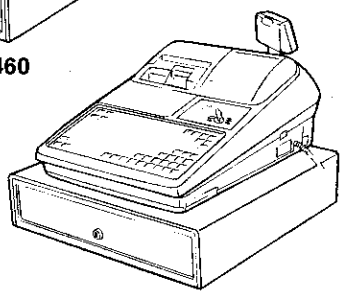

ER-A470

ELECTRONIC CASH REGISTER

ER-A460
MODEL ER-A470

SRV Key : LKGIM7113RCZZ
PRINTER: DP-730
(For "V" version)

CAUTION
EXTREME CAUTION MUST BE TAKEN WHEN SERVICING THIS MACHINE. EVEN THOUGH THE MODE SWITCH IS IN THE OFF POSITION, VOLTAGE IS STILL SUPPLIED TO THE ENTIRE MACHINE.
WHEN WORKING ON THIS MACHINE MAKE SURE THAT THE POWER CORD IS REMOVED FROM THE WALL OUTLET.

CONTENTS

CHAPTER 1. SPECIFICATIONS 1
CHAPTER 2. OPTIONS 6
CHAPTER 3. SRV. RESET AND MASTER RESET 9
CHAPTER 4. HARDWARE DESCRIPTION 10
CHAPTER 5. TEST FUNCTION 32
CHAPTER 6. DOWN LOAD FUNCTION 39
CHAPTER 7. CIRCUIT DIAGRAM & PWB LAYOUT 41

PARTS GUIDE

Parts marked with "⚠" is important for maintaining the safety of the set. Be sure to replace these parts with specified ones for maintaining the safety and performance of the set.

SHARP CORPORATION

This document has been published to be used for after sales service only.
The contents are subject to change without notice.

CHAPTER 1. SPECIFICATIONS

1. Appearance/Rating

1) Appearance

ER-A460

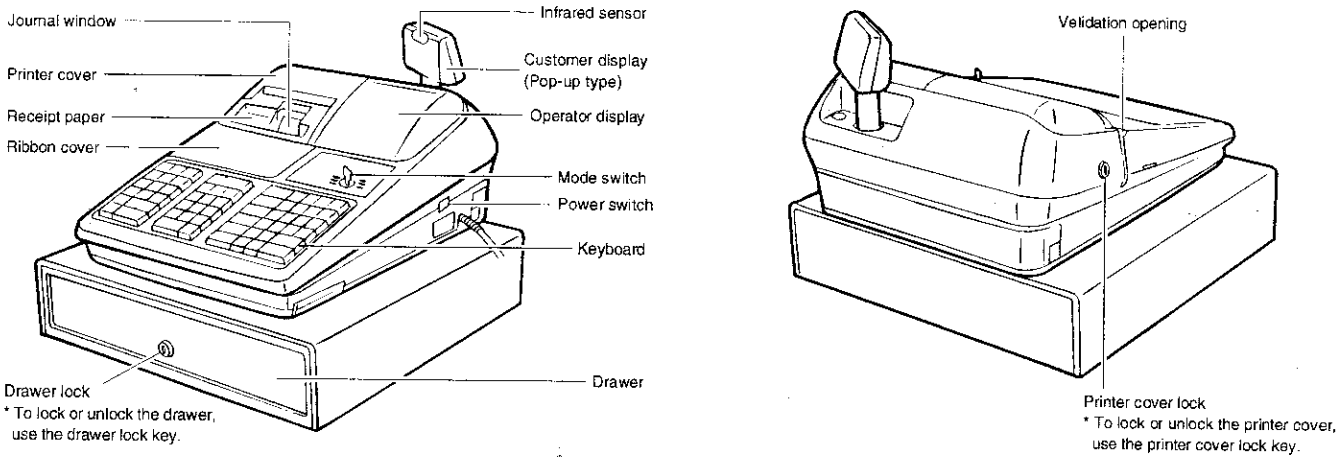

Fig. 1-1

ER-A470

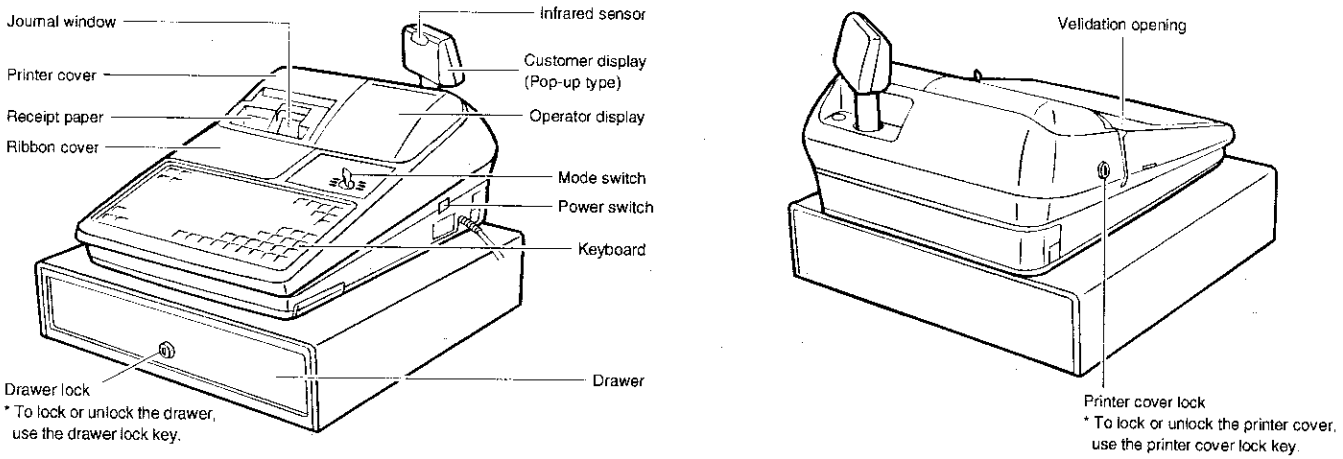

Fig. 1-2

2) Rating

Power source	AC local voltage (±10%) 60Hz
Power consumption	Standby: 7 W Maximum: 45 W with options installed.
Operating temperature	0°C~40°C (32°F~104°F)
Operating humidity	10%~90% (RH)
Physical dimensions, including the drawer	421(W) × 448(D) × 302(H)mm
Weight	13.4 kg

2. Keyboard

1) Standard keyboard layout

① ER-A460

↑ RECEIPT	↑ JOURNAL	GC COPY	AMT	PLU/SUB		6	12	18	AUTO	CASH #
RCPT	VP	#	⊗	•	CL	5	11	17	EX1	EX2
NS	%1	%2	7	8	9	4	10	16	CR1	CR2
VAT	⊖1	⊖2	4	5	6	3	9	15	CH1	CH2
RA	RF		1	2	3	2	8	14	ST	
PO	∞		0		00	1	7	13	TL	

② ER-A470

↑ RECEIPT	↑ JOURNAL	3	6	9	12	L3	8	16	24	32	40	48	56	64
RCPT	VP	2	5	8	11	L2	7	15	23	31	39	47	55	63
CASH #	VAT	1	4	7	10	L1	6	14	22	30	38	46	54	62
#	GC COPY	⊗	•	CL	AMT	CR2	5	13	21	29	37	45	53	61
⊖1	⊖2	7	8	9	PLU/ SUB	CR1	4	12	20	28	36	44	52	60
%1	%2	4	5	6	AUTO	CH	3	11	19	27	35	43	51	59
PO	RA	1	2	3	NS	EX1	2	10	18	26	34	42	50	58
RF	∞	0	00	000	ST	TL	1	9	17	25	33	41	49	57

Fig. 2-1

2) Key top name

① Standard key top

KEY TOP	DESCRIPTION	ER-A460	ER-A470
0 to 9, 00	Numeric keys	○	○
000	000 key	×	○
↑ RECEIPT	Receipt paper feed key	○	○
↑ JOURNAL	Journal paper feed key	○	○
•	Deceimal point key	○	○
⊗	Multiplication key	○	○
CL	Clear key	○	○
DEPT. 1 ~ 18	Department 1 ~ 18 keys	○	×
DEPT. 1 ~ 12	Department 1 ~ 12 keys	×	○
PLU 1 ~ 64	Direct PLU 1 to 64 keys	○	×
PLU/SUB	PLU/SUB department key	○	○
GC COPY	Guest check copy key	○	○
VAT	Value added tax key	○	○
VP	Validation print key	○	○
#	Non-add code entry key	○	○
CASH#	Cashier code entry key	○	○
RCPT	Receipt print key	○	○
⊖ 1	Discount 1 key	○	○
⊖ 2	Discount 2 key	○	○
AUTO	Automatic sequencing key	○	○
%1	Percent 1 key	○	○
%2	Percent 2 key	○	○
EX1	Foreign currency exchange 1 key	○	○
EX2	Foreign currency exchange 2 key	○	×
NS	No-sale key	○	○
RA	Received on account key	○	○
PO	Paid out key	○	○
RF	Refund key	○	○
∽	Void key	○	○
CR1	Credit 1 key	○	○
CR2	Credit 2 key	○	○
CH1	Cheque 1 key	○	×
CH2	Cheque 2 key	○	×
CH	Cheque key	×	○
AMT	Amount key	○	○
ST	Subtotal key	○	○
TL	Total (cash total) key	○	○
L1	PLU's level shift 1 key	×	○
L2	PLU's level shift 2 key	×	○
L3	PLU's level shift 3 key	×	○

② Option key top

KEY TOP	DESCRIPTION	ER-A460	ER-A470
L1	PLU's level shift 1 key	○	×
L2	PLU's level shift 2 key	○	×
L3	PLU's level shift 3 key	○	×
DEPT. 19 ~ 50	Department 19 ~ 50 keys	○	×
DEPT. 13 ~ 50	Department 13 ~ 50 keys	×	○
PLU 1 ~ 82	Direct PLU 1 to 82 keys	○	×
PLU 65 ~ 118	Direct PLU 1 to 118 keys	×	○
VAT SHIFT	Value added tax shift key	○	○
% 3	Percent 3 key	○	○
% 4	Percent 4 key	○	○
⊖ 3	Discount 3 key	○	○
⊖ 4	Discount 4 key	○	○
AUTO 2	Automatic sequencing 2 key	○	○
AUTO 3	Automatic sequencing 3 key	○	○
AUTO 4	Automatic sequencing 4 key	○	○
AUTO 5	Automatic sequencing 5 key	○	○
RA 2	Received on account 2 key	○	○
PO 2	Paid out 2 key	○	○
CR3	Credit 3 key	○	○
CR4	Credit 4 key	○	○
CH3	Cheque 3 key	○	×
CH4	Cheque 4 key	○	×
CA2	Cash total 2 key	○	○
EX2	Foreign currency exchange 2 key	×	○
EX3	Foreign currency exchange 3 key	○	○
EX4	Foreign currency exchange 4 key	○	○
DIFFER ST	Difference subtotal key	○	○

3. Mode switch

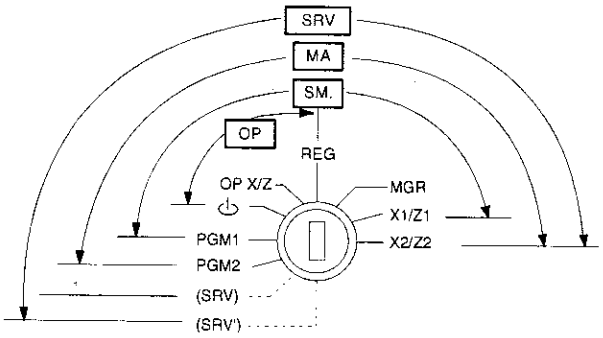

Fig. 3-1

* The key can be removed in the REG or OFF position.
* In the SRV' mode, key inputs are prohibited and no display is made.
* With the key in the off position power is still supplied to the main PWB.

[Functions]

- Function for each key position
- SRV': System reset
- SRV: Service mode (Service programming)
- PGM2: Allows programming of an item that is not changed frequently, in addition to the PGM1 mode programming.
- PGM1: Allows programming of items frequently changed (e.g. department, PLU pricing, and discount rate setting).
- OP/XZ: Allows X or Z operation by servers or cashiers.
- REG: Allows registrations.
- MGR: Allows the operations, by authorized person such as a manager (e.g. correction after transaction finished or cancellation of entry limits), which are not permitted to ordinary cashiers.
- X1/Z1: Allows reading and resetting of a day's sales total.
- X2/Z2: Allows reading or resetting sales totals in a specified period.
- ⏻: Switches off the display to prevent keyboard entries.

  (The setting does not turn off the AC power.)

4. Display

1) Layout

① Operator display

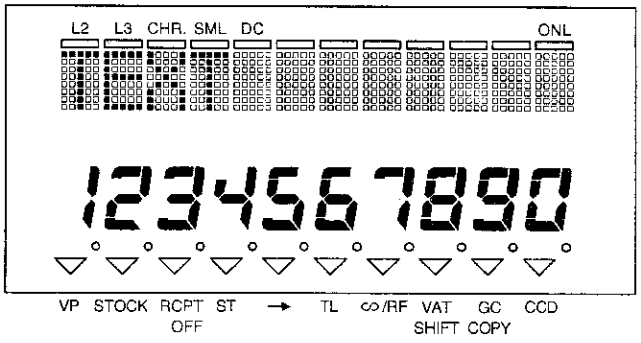

Fig. 4-1

	Dot display	7 segment display
No. of positions	12	10
Color of display	Green	Green
Character size	6.6 (H) × 4.6 (W) mm	10.0 (H) × 4.3 (W) mm

② Customer display

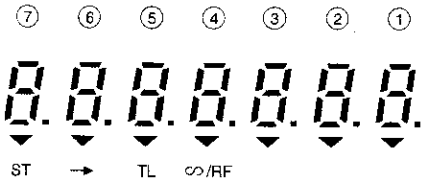

Fig. 4-2

No. of positions	7
Color of display	Green
Character size	10 (H) × 4.5 (W) mm

Lamps

Display contents	Description
L2	The lamp lights up when PLU level is 2.
L3	The lamp lights up when PLU level is 3.
CHR.	The lamp lights up when character key sheet mode in text setting
SML	The lamp lights up when small characters are being inputted in text setting
DC	The lamp lights up when double width characters are being inputted in text setting.
ONL	The lamp lights up when the machine is connected to the online transmission line; and it goes off when the machine is disconnected from the line. The lamp blinks during data transmission.
VP	The lamp lights up when Validation print is under compulsion.
STOCK	The lamp lights up when stock is empty state.
RCPT OFF	The lamp lights up when receipt is OFF state.
ST	The lamp lights up when a subtotal is displayed.
→	The lamp lights up when change amount is displayed after tendering.
TL	The lamp lights up when a transaction is finalized with CASH, CHECK, CREDIT, or CHARGE key, however, the lamp does not light up when a transaction is finalized with an amount tendered entry.
∽/RF	The lamp lights up when the void or refund key is pressed.
VAT SHIFT	The lamp lights up when the vat shift key is pressed.
GC COPY	The lamp lights up when the guest check copy mode.
CCD	The lamp lights up when the CCD registration.

5. Printer (DP-730)

1) Specifications

- Part number: DP-730
- No. of stations: 2
- Printing system: Mechanical serial dot
- Direction of printing: Bidirectional
- Printing capacity: Receipt – 24 characters
  Journal – 24 characters
  Validation – 55 characters (one line only)

- Character size: 2.4 (H) × 1.36 (W) mm
  Print pitch:
  Column distance 1.59 mm
  Row distance 5.08 mm
- Total number of dots: Receipt – 108 dots/216 positions
  Journal – 108 dots/216 positions
  Validation – 248 dots/495 positions
- Font: 7 × 7 dots (including half dot)
  Space between characters – 1 dot (2 positions)
- Distance between dots: 0.353 mm (H) × 0.353 mm (W)
- Journal near end sensor: Service route option
- Print speed: Approx. 3.0 lines/sec.
- Paper feed speed: Receipt – Approx. 30 lines/sec.
  Journal – Approx. 30 lines/sec.
- Reliability: MCBF – 400 million lines (excluding the print head)
  Head life – 10,000 characters (in the case of printing average 2 dots per character per wire
- Validation form sensor: Not setup

2) Printing area

Receipt/journal

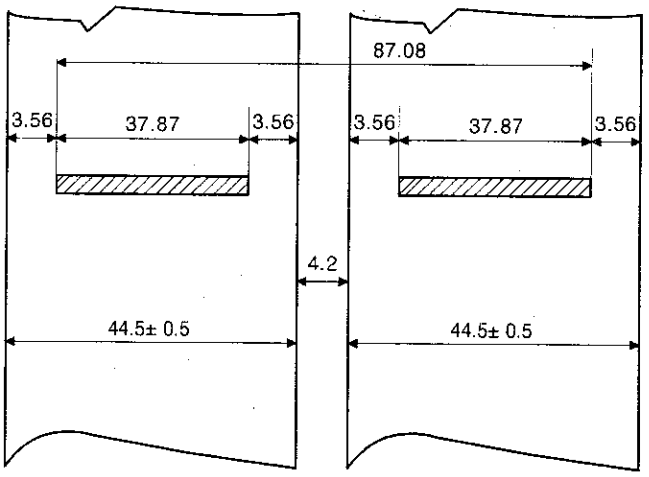

Unit : mm

Fig. 5-1

Validation form

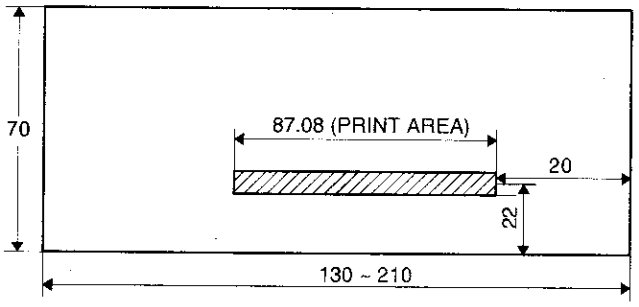

Unit : mm

Fig. 5-2

3) Paper

- Paper roll dimensions: 44.5±0.5mm in width, 83mm in diameter
- Paper quality: Journal
  Bond paper (paper thickness: 0.06 to 0.09mm, paper weight: 52.3 to 64g/m^2)
  Validation form
  Thickness: 0.07 to 0.14mm
  Size: 130mm or more (W) × 70mm or more (H)

4) Inking

- Ink supply system: Ink ribbon
- Form: Cartridge/Endless ribbon
- Specification: Material – Nylon
- Ribbon life: Approx. 6 million characters
- Print color: Purple (single color)

5) Logo stamp

- Material: Porous rubber
- Stamp color: Purple (single color)
- Max. stamp size: 30(W) × 20(H) mm
- Ink refill: Allowed (UINK-1001CCZZ: 5CC)

6) Cutter

- Method: Manual

6. Drawer

1) Specification

(1) Drawer box and drawer

Model name of the drawer box	SK423
Size	420 (W) × 426 (D) × 114 (H)
Color	Light olive gray
Material	Metal
Bell	—
Release lever	Standard equipment; situated at the bottom
Drawer open sensor	Standard equipment
Separation from the main unit	Allowed with service kit

2) Money case

Separation from the drawer	Allowed
Separation of the bill compartments from the coin compartments	Disallowed
Bill separator	—
Number of compartments	4B/8C

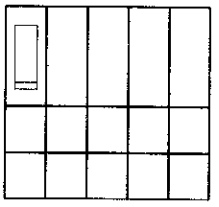

4B/8C

3) Lock

- Location of the lock: Front
- Method of locking and unlocking: To lock, insert the drawer lock key into the lock and turn it 90 degrees counterclockwise. To unlock, insert the drawer lock key and turn it 90 degrees clockwise.
- Key no.: SK1-1

CHAPTER 2. OPTIONS

1. System configuration

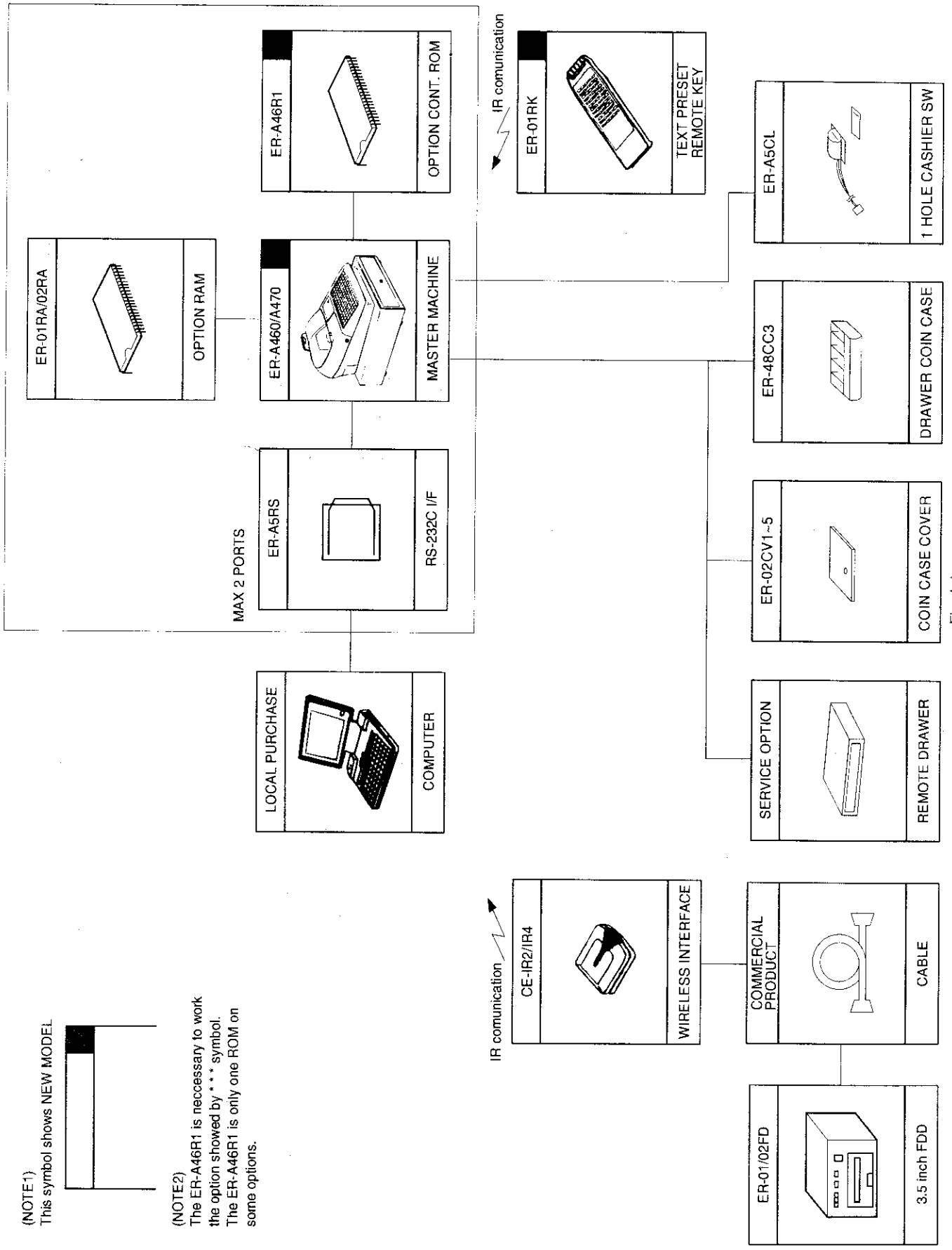

Fig. 1-1

(NOTE1)
This symbol shows NEW MODEL

(NOTE2)
The ER-A46R1 is neccessary to work the option showed by * * * symbol.
The ER-A46R1 is only one ROM on some options.

2. Options

NO	NAME	MODEL	DESCRIPTION
1	ONE HOLE CASHIER KEY	ER-A5CL	
2	EXPANSION RAM CHIP	ER-01RA	32K bytes RAM chip
		ER-02RA	128K bytes RAM chip
3	ON-LINE SYSTEM	ER-A5RS	2ports RS-232 I/F
4	CONTROL ROM	ER-A46R1	Control for ER-A5RS
5	PRESETS LOADER	ER-01FD/02FD	FD unit
6	KEY TOP KIT (For ER-A460)	ER-11KT7	1 × 1 key top
		ER-12KT7	1 × 2 key top
		ER-22KT7	2 × 2 key top
		ER-11DK7	1 × 1 dummy key
		ER-51DK7	5 × 1 dummy key
7	PROGRAMMING REMOTE KEYBOARD	ER-01RK	IR I/F text preset keyboard
8	WIRELESS INTERFACE	CE-IR2/IR4	For IR communication
9	COIN CASE	ER-48CC2	
10	COIN CASE COVER	ER-01CV1~01CV5	

3. Service options

NO.	NAME	PARTS CODE	PRICE RANK	DESCRIPTION	ER-A460	ER-A470
1	SERVICE KEY	LKGIM7113RCZZ	AK	For the mode switch	○	○
2	DRIP-PROOF SWITCH COVER	GCOVB7108BHZZ	BA		○	○
3	MODE KEY GRIP COVER	LKGIM7126RCZZ	AL	OP key only	○	○
4	DRIP-PROOF KEYBOARD COVER	GCOVB7109BHZZ	BF		○	×
5	JOURNAL NEAR END SENSOR	DUNT-4945BHZZ	AY		○	○
6	PROGRAMMING CHARACTER KEYBOARD COVER	GCOVB7110BHZA	BE		○	×
7	REMOTE DRAWER	CBOXD7136BH01	BU		○	○
8	CLERK COVER "B"	GCOVA7107BHZB	AG	For ER-A5CL	○	○
	CLERK ANGLE	LANGT7581BHZZ	AM		○	○

4. Service tools

NO.	NAME	PARTS CODE	PRICE RANK
1	EXPANSION PWB	CKOG-6708RCZZ	BU
2	RS-232 LOOP BACK CONNECTOR FOR ER-A5RS	UKOG-6705RCZZ	BU
3	KEY TOP REMOVER (For ER-A460)	UKOG-6634RCZZ	AX

5. Supplies

NO.	NAME	PARTS CODE	PRICE RANK	DESCRIPTION
1	ROLL PAPER	DPAPR1006CSZZ	AR	5rolls/pack
2	INK RIBBON	PRBN-6644RCZZ	AZ	
3	INK FOR STAMP	UINK-1001CCZZ	AK	5 cc
4	KEY SHEET (For ER-A470)	PSHEK6830BHZZ	AU	Programming character sheet
		PSHEK6829BHZZ	AR	Standard character sheet
		PSHEK6828BHZZ	AK	Blank character sheet

6. Options

For installation of the options, refer to the Installation Manual which is issued separately.

7. How to use service tools

7-1. Expansion PWB: CKOG-6708RCZZ

- External view

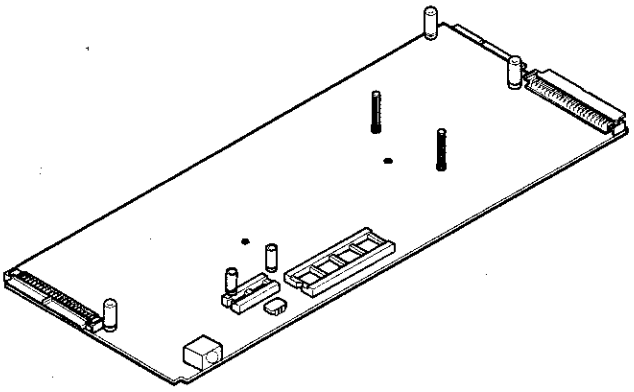

Fig. 7-1

Purpose 1: Used for servicing and repairing of options (such as the and the ER-A5RS) which are connected with the main body option connector.

[Procedure 1]
Use an insulator base as shown in Fig. 7-2 (shaded section) and perform servicing.

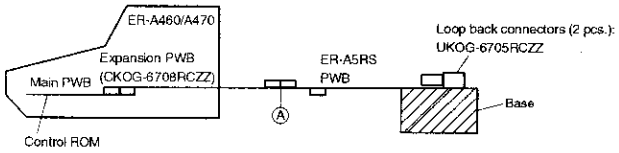

Fig. 7-2

To check the option I/F PWB from the solder side, connect the I/F PWB to OPTCN2. To check from the parts side, connect to OPTCN3.

(Note) The option I/F PWB should be held horizontally so that no excessive stress is applied to connecting section Ⓐ in Fig. 7-2.

[Procedure 2]

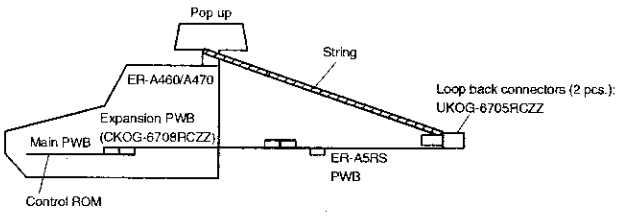

Fig. 7-3

Put a string between the pop up and the option PWB, as shown in Fig. 7-3. Adjust the length of the string so that the CKOG-6708RCZZ and the option PWB are not binding. Then perform servicing.

CHAPTER 3. SRV. RESET AND MASTER RESET

1. SRV. reset (Program Loop Reset)

Used to return the machine back to its operational state after a lock-up has occurred.

Procedure

- Method 1
  1) Unplug the AC cord from the wall outlet.
  2) Set the mode switch to (SRV') position.
  3) Plug in the AC cord to the wall outlet.
  4) Turn to (SRV) position from (SRV') position.
- Method 2
  1) Set the mode switch to PGM2 position.
  2) Turn off the AC switch.
  3) While holding down JOURNAL FEED key and RECEIPT FEED key, Turn on the AC switch.

Note: When disassembling and reassembling always power up using method 1 only. Method 2 will not reset the CKDC6.

Note: SRV programming job#926-B must be set to "4" to allow PGM program loop reset.

2. Master reset (All memory clear)

There are two possible methods to perform a master reset.

- MRS-1

Used to clear all memory contents and return machine back to its initial settings and return keyboard back to default keyboard.

Procedure

1) Unplug the AC cord from the wall outlet.
2) Set the MODE switch to the (SRV') position.
3) Plug in the AC cord to the wall outlet.
4) While holding down JOURNAL FEED key, turn to (SRV) position from (SRV') position.

- MRS-2

Used to clear all memory and keyboard contents.
This reset returns all programming back to defaults. The keyboard must be entered by hand.
This reset is used if an application needs different keyboard layout other than that supplied by a normal MRS-1.

Procedure

1) Unplug the AC cord from the wall outlet.
2) Set the MODE switch to the (SRV') position.
3) Plug in the AC cord to the wall outlet.
4) While holding down JOURNAL FEED key and RECEIPT FEED key, turn to (SRV) position from (SRV') position.
5) Key position assignment:

* After the execution of MRS-2, only the RECEIPT FEED and JOURNAL FEED keys can remain effective on key assignment. Any key can be assigned on any key position on the main keyboard.

[key setup procedure]

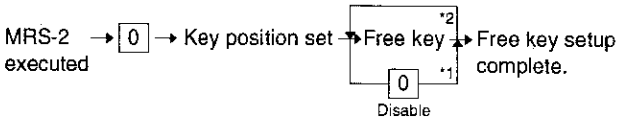

NOTES:

*1: When the 0 key is pressed, the key of the key number on display is disabled.

*2: Push the key on the position to be assigned. With this, the key of the key number on display is assigned to that key position.

Key number	Key name	Key number	Key name
1	Numeric key "0"	9	Numeric key "8"
2	Numeric key "1"	10	Numeric key "9"
3	Numeric key "2"	11	Numeric key "00"
4	Numeric key "3"	13	Decimal point key
5	Numeric key "4"	14	CL key
6	Numeric key "5"	15	@/FOR key
7	Numeric key "6"	16	SBTL key
8	Numeric key "7"	17	CA/AT key

CHAPTER 4. HARDWARE DESCRIPTION

1. Hard ware block diagram

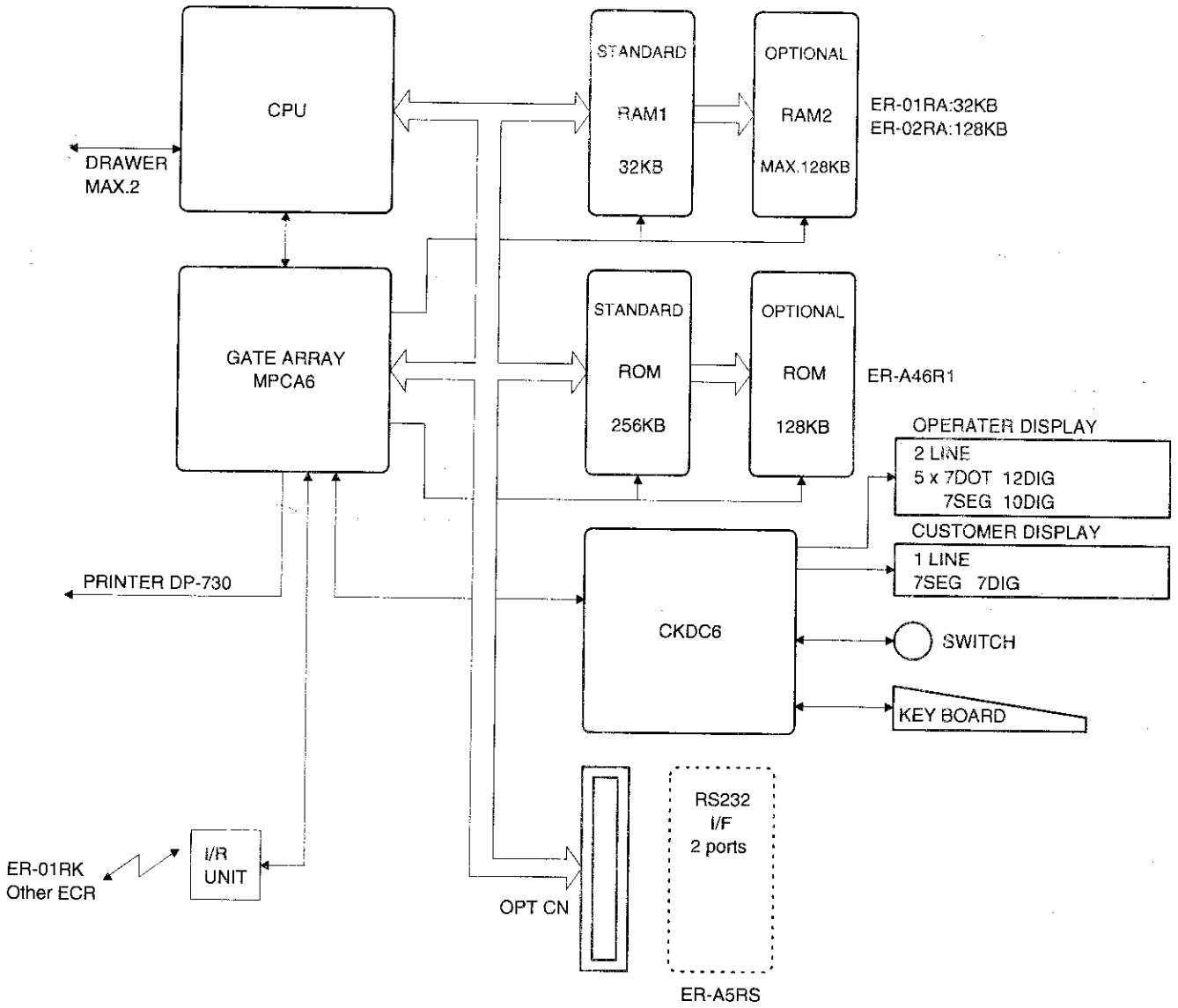

Fig. 1-1

2. Description of main LSI's

2-1. CPU (HD6415108FX)

1) Pin configuration

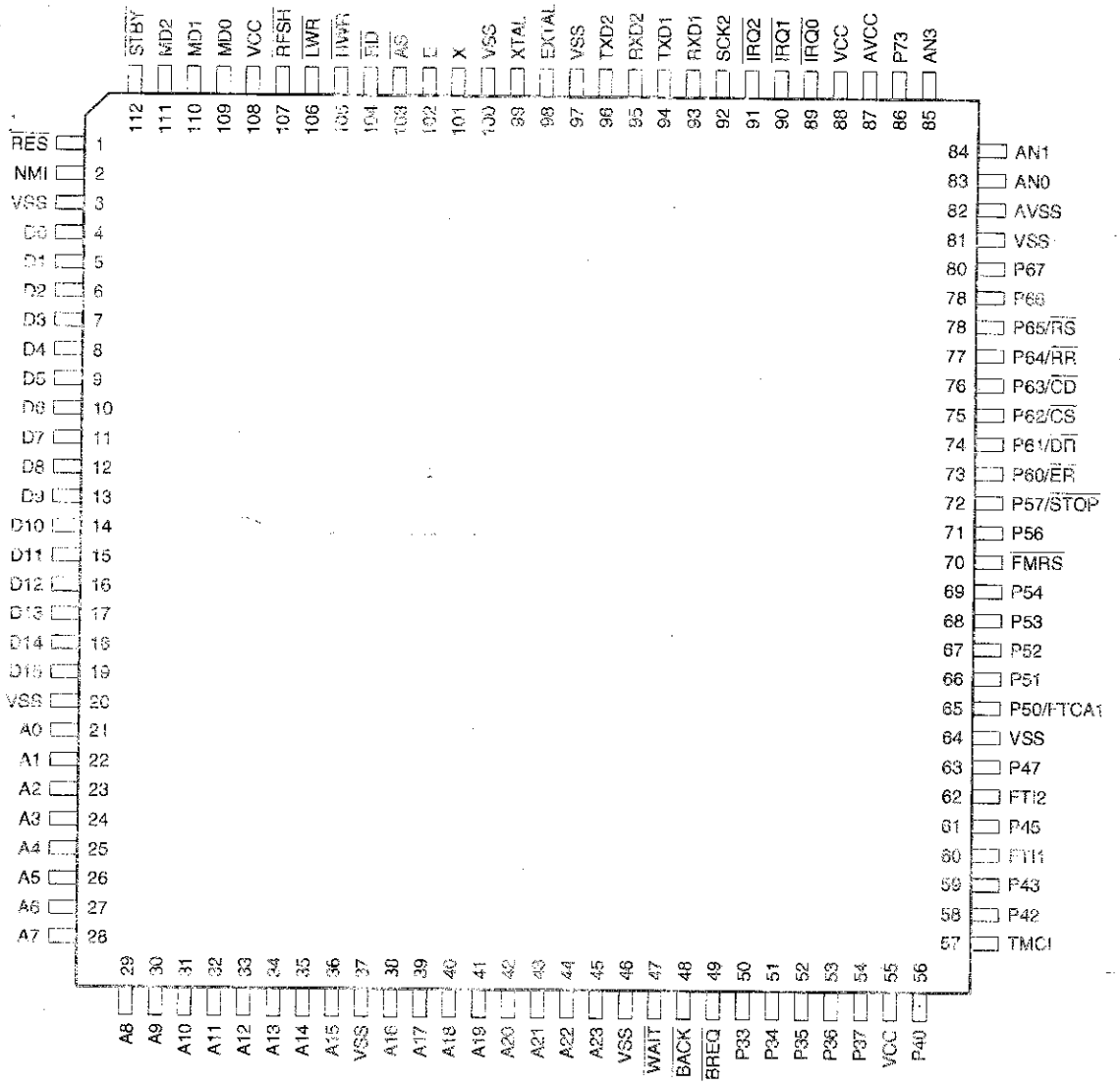

HD6415108FX pin configuration

Fig. 2-1

2) Block diagram

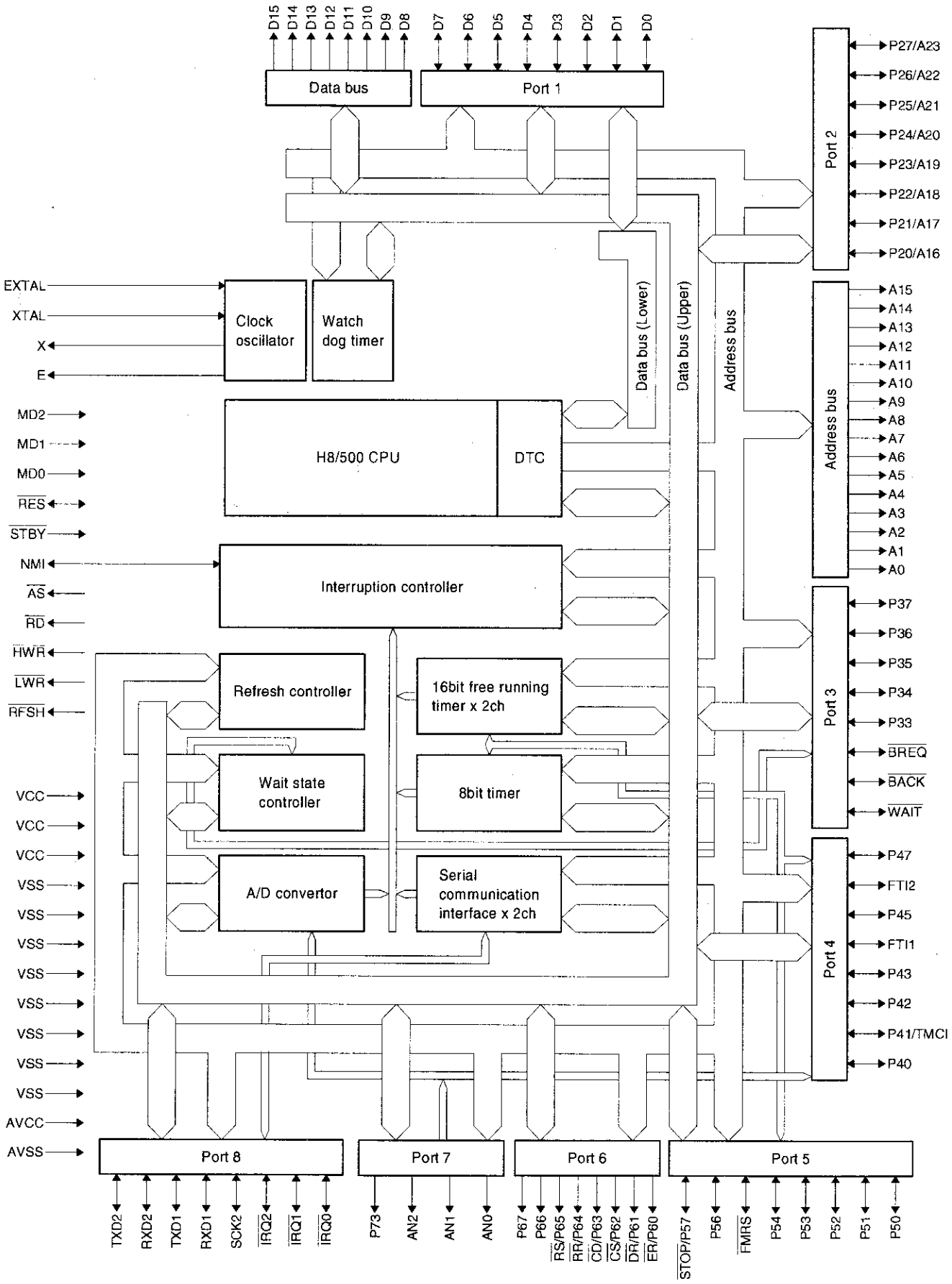

Fig. 2-2

3) Pin description

Pin No.	Symbol	Signal name	In/ Out	Function
1	$\overline{RES}$	$\overline{RESET}$	I/O	Reset input
2	NMi	NMi	In	Non-maskable interrupt input for SSP interrupt input.
3	VSS	NU	In	GND
4	D0	Nu	In	GND
5	D1	Nu	In	GND
6	D2	Nu	In	GND
7	D3	Nu	In	GND
8	D4	Nu	In	GND
9	D5	Nu	In	GND
10	D6	Nu	In	GND
11	D7	Nu	In	GND
12	D8	D0	I/O	Data bus
13	D9	D1	I/O	Data bus
14	D10	D2	I/O	Data bus
15	D11	D3	I/O	Data bus
16	D12	D4	I/O	Data bus
17	D13	D5	I/O	Data bus
18	D14	D6	I/O	Data bus
19	D15	D7	I/O	Data bus
20	VSS	NU	In	GND
21	A0	A0	Out	Address bus
22	A1	A1	Out	Address bus
23	A2	A2	Out	Address bus
24	A3	A3	Out	Address bus
25	A4	A4	Out	Address bus
26	A5	A5	Out	Address bus
27	A6	A6	Out	Address bus
28	A7	A7	Out	Address bus
29	A8	A8	Out	Address bus
30	A9	A9	Out	Address bus
31	A10	A10	Out	Address bus
32	A11	A11	Out	Address bus
33	A12	A12	Out	Address bus
34	A13	A13	Out	Address bus
35	A14	A14	Out	Address bus
36	A15	A15	Out	Address bus
37	VSS	NU	In	GND
38	A16	A16	Out	Address bus
39	A17	A17	Out	Address bus
40	A18	A18	Out	Address bus
41	A19	A19	Out	Address bus
42	A20	A20	Out	Address bus
43	A21	A21	Out	Address bus
44	A22	A22	Out	Address bus
45	A23	A23	Out	Address bus
46	VSS	NU	In	GND
47	$\overline{WAIT}$	$\overline{WAIT}$	In	Wait signal
48	$\overline{BACK}$	$\overline{BACK}$	Out	Bus control request acknowledge
49	$\overline{BREQ}$	$\overline{BREQ}$	In	Bus control request
50	P33	DOPS	In	Drawer open signal
51	P34	$\overline{DR0}$	Out	Option drawer open signal
52	P35	$\overline{DR1}$	Out	Remote drawer No.1 open signal
53	P36	$\overline{DR2}$	Out	Remote drawer No.2 open signal (NU)
54	P37	$\overline{DR3}$	Out	Remote drawer No.3 open signal (NU): GND
55	VCC	VCC	In	+5V
56	P40	$\overline{IFV}$	In	Slip printer (M-240) interface connect signal (NU)
57	TMCi	$\overline{PTMG}$	In	Printer (DP-730) timing signal
58	P42	$\overline{TOF}$	In	Slip printer (M-240) TOF sensor signal (NU)
59	P43	$\overline{BOF}$	In	Slip printer (M-240) BOF sensor signal (NU)
60	FTi1	$\overline{PRST}$	In	Printer (DP-730) reset signal
61	P45	$\overline{NEJ}$	In	Near end sensor journal side
62	FTi2	$\overline{SHEN}$	In	CKDC Interface shift enable signal
63	P47	$\overline{NER}$	In	Near end sensor receipt side
64	VSS	VSS	In	GND
65	P50/FTCA1	TRGI	Out	Dot pulse adjust signal
66	P51	NU	Out	NC
67	P52	NU	Out	NC
68	P53	NU	In	GND
69	P54	NU	Out	NC
70	$\overline{FMRS}$	NU	In	NC
71	P56	NU	Out	NC
72	P57/$\overline{STOP}$	$\overline{STOP}$	Out	System reset output. Normally
73	P60/$\overline{ER}$	$\overline{ERS}$/$\overline{ER}$	Out	SIO control signal (Equipment ready) (NU)
74	P61/$\overline{DR}$	$\overline{DRS}$/$\overline{DR}$	In	SIO control signal (Data set ready) (NU)
75	P62/$\overline{CS}$	$\overline{CSS}$/$\overline{CS}$	In	SIO control signal (Clear to send) (NU)
76	P63/$\overline{CD}$	$\overline{CDS}$/$\overline{CD}$	In	SIO control signal (Carrier detect) (NU)
77	P64/$\overline{RR}$	$\overline{RRS}$/$\overline{RR}$	Out	SIO control signal (Ready to receive) (NU)
78	P65/$\overline{RS}$	$\overline{RSS}$/$\overline{RS}$	Out	SIO control signal (Request to send) (NU)
79	P66	RCO	In	Remote keyboard input signal
80	P67	HP	In	Printer home position signal
81	VSS	NU	In	GND
82	AVSS	NU	In	GND
83	AN0	VPJ	In	Validation sensor journal
84	AN1	VPR	In	Validation sensor receipt (NU)
85	AN3	VPTEST	In	+24V test input
86	P73	$\overline{VPPS}$	In	Validation sense signal (NU)
87	AVCC	AVCC	In	+5V
88	VCC	VCC	In	+5V
89	$\overline{IRQ0}$	$\overline{IRQ0}$	In	Interrupt signal 0
90	$\overline{IRQ1}$	$\overline{IRQ1}$	In	Interrupt signal 1 (RS-232C)
91	SCK1	UASCK	In	I/R control signal (Shift clock)
92	SCK2	SCK2	In	CKDC Interface sync shift clock
93	RXD1	/UARX	In	I/R control signal (Receive data)
94	TXD1	/UATX	Out	I/R control signal (Transmit data)

Pin No.	Symbol	Signal name	In/ Out	Function
95	RXD2	RXD2	In	CKDC Interface shift input data
96	TXD2	TXD2	Out	CKDC Interface shift output data
97	VSS	NU	In	GND
98	EXTAL	EXTAL	In	Crystal oscillator connection
99	XTAL	XTAL	In	Crystal oscillator connection
100	VSS	NU	In	GND
101	X	X	Out	System clock
102	E	NU	Out	Nu
103	$\overline{AS}$	$\overline{AS}$	Out	Address strobe
104	$\overline{RD}$	$\overline{RD}$	Out	Read
105	$\overline{HWR}$	$\overline{WR}$	Out	Write
106	$\overline{LWR}$	$\overline{LWR}$	Out	Nu
107	$\overline{RFSH}$	$\overline{RFSH}$	Out	Refresh cycle
108	VCC	VCC	In	+5V
109	MD0	MD0	In	+5V (MODE 3)
110	MD1	MD1	In	+5V (MODE 3)
111	MD2	MD2	In	GND (MODE 3)
112	$\overline{STBY}$	$\overline{STBY}$	In	+5V (Nu)

2-2. G.A (MPCA6)

1) Pin configuration

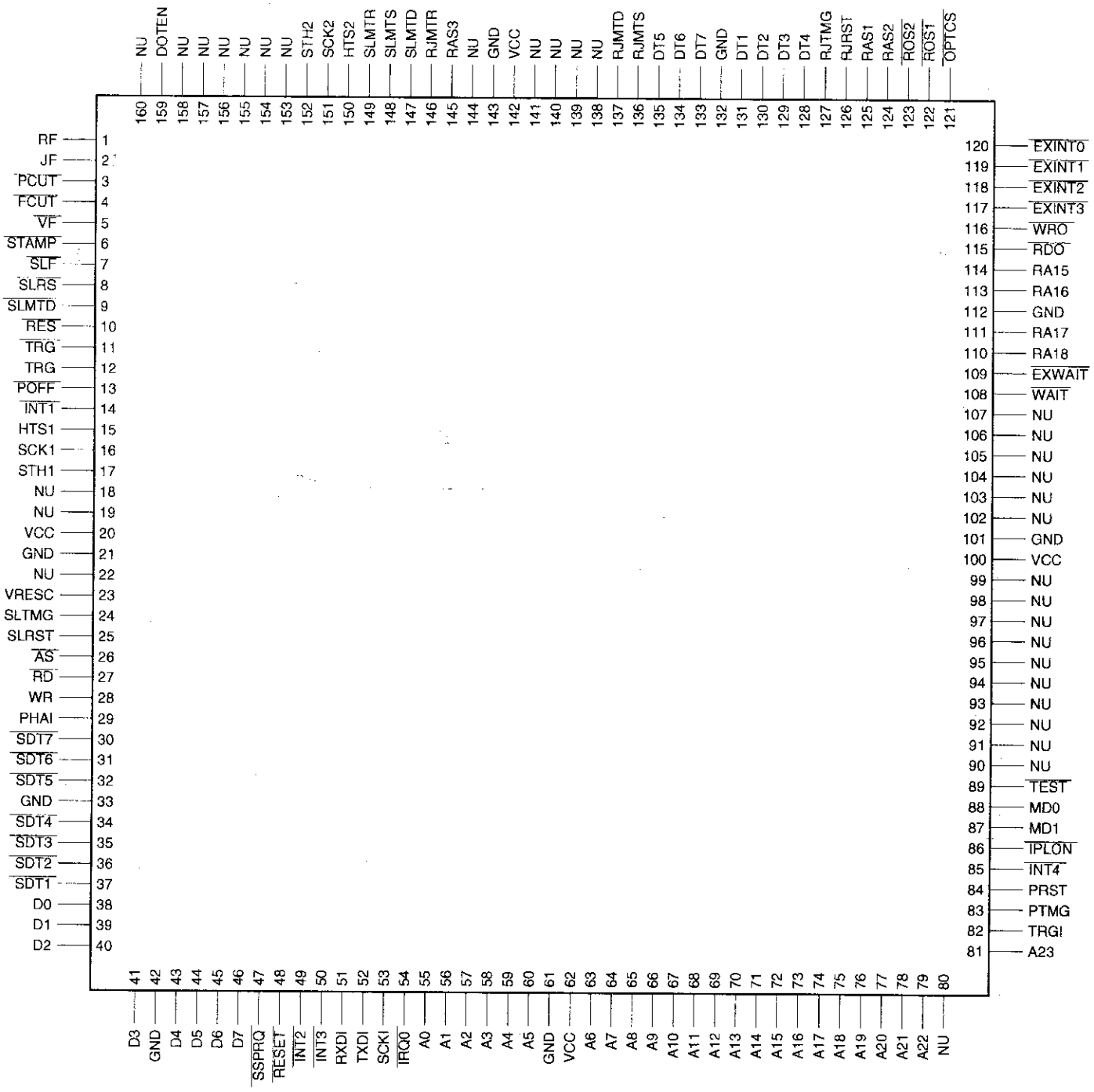

GATE ARRAY (F258016PC)
MPCA5

Fig. 2-3

2) Block diagram

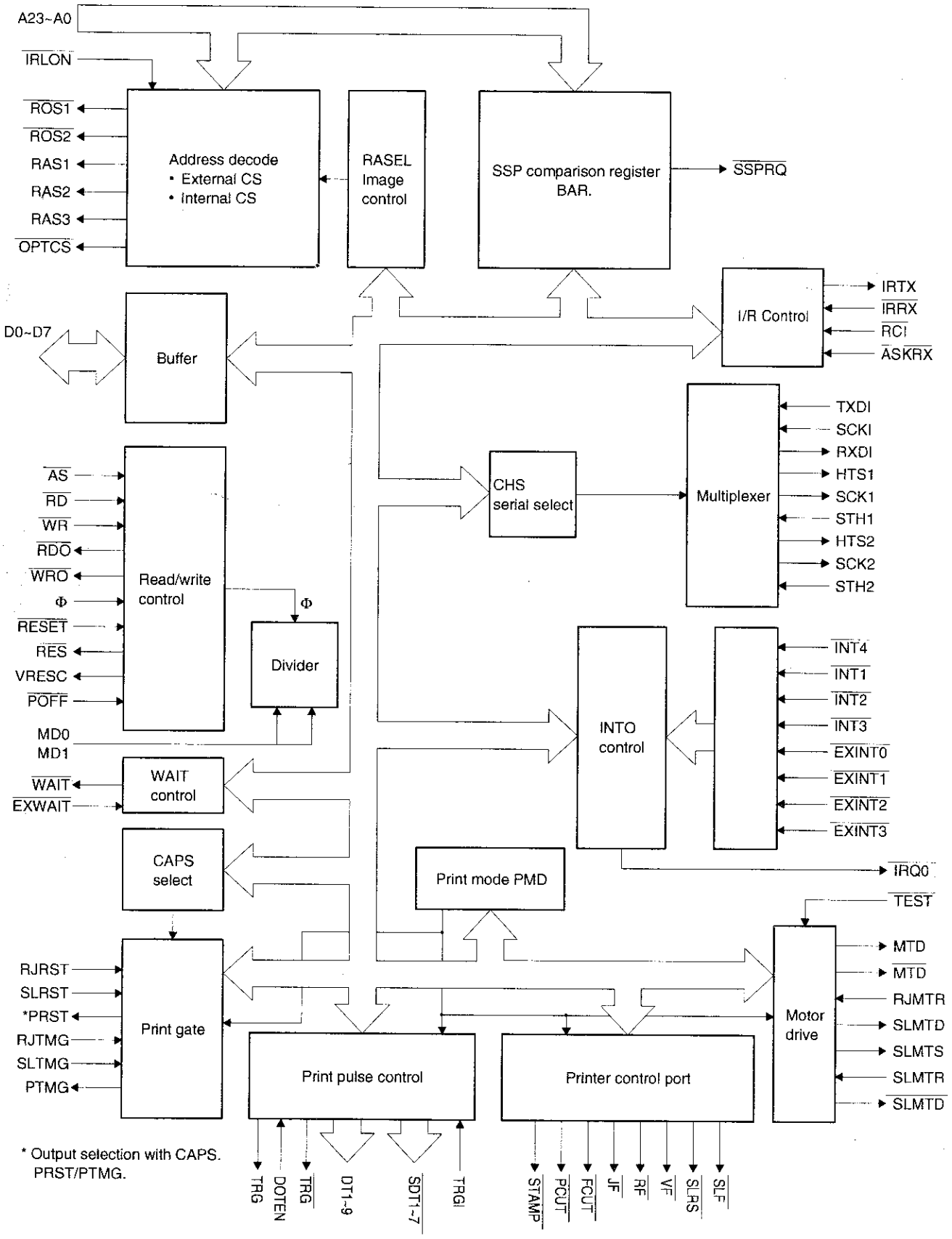

Fig. 2-4

3) Pin description

Pin No.	Signal name	In/ Out	Function
1	RF	Out	Receipt side paper feed solenoid
2	JF	Out	Journal side paper feed solenoid
3	$\overline{PCUT}$	Out	Printer partial cut signal (NU)
4	$\overline{FCUT}$	Out	Printer auto cut signal (NU)
5	$\overline{VF}$	Out	Multi line validation paper feed (NU)
6	$\overline{STAMP}$	Out	Printer stamp signal (NU)
7	$\overline{SLFS}$	Out	Slip printer paper feed singnal (NU)
8	$\overline{SLRS}$	Out	Slip printer release signal (NU)
9	$\overline{SLMTD}$	Out	Slip printer motor drive signal (NU)
10	$\overline{RES}$	Out	Peripheral output reset
11	$\overline{TRG}$	Out	Dot head trigger signal (NU)
12	TRG	Out	Dot head trigger signal
13	$\overline{POFF}$	In	Power off signal input
14	$\overline{INT1}$	In	Interrupt signal (Key interrupt request)
15	HTS1	Out	8 bit serial port output
16	SCK1	Out	Serial port shift clock output
17	STH1	In	8 bit serial port input
18	RAS VZ	—	Chip select (NU)
19	—	—	Nu
20	VCC	—	+5V
21	GND	—	GND
22	INTMCR	—	Interrupt (NU)
23	VRESC	Out	Turns active when reset and power down is met
24	SLTMG	In	Slip printer timing signal (NU)
25	SLRST	In	Slip printer reset signal (NU)
26	$\overline{AS}$	In	Address strobe
27	$\overline{RD}$	In	Read strobe
28	$\overline{WR}$	In	Write strobe
29	ϕ	In	(ϕ) System clock (7.3728 MHz)
30	$\overline{SDT7}$	Out	Slip printer printhead drive signal (dot7) (NU)
31	$\overline{SDT6}$	Out	Slip printer printhead drive signal (dot6) (NU)
32	$\overline{SDT5}$	Out	Slip printer printhead drive signal (dot5) (NU)
33	GND	—	GND
34	$\overline{SDT4}$	Out	Slip printer printhead drive signal (dot4) (NU)
35	$\overline{SDT3}$	Out	Slip printer printhead drive signal (dot3) (NU)
36	$\overline{SDT2}$	Out	Slip printer printhead drive signal (dot2) (NU)
37	$\overline{SDT1}$	Out	Slip printer printhead drive signal (dot1) (NU)
38	D0	I/O	Data bus 0
39	D1	I/O	Data bus 1
40	D2	I/O	Data bus 2
41	D3	I/O	Data bus 3
42	GND	—	GND
43	D4	I/0	Data bus 4
44	D5	I/0	Data bus 5
45	D6	I/0	Data bus 6
46	D7	I/0	Data bus 7
47	$\overline{SPRQ}$	Out	SSP interrupt request to CPU
48	$\overline{RESET}$	In	MPCA reset
49	$\overline{INT2}$	In	Interrupt signal (Nu)

Pin No.	Signal name	In/ Out	Function
50	$\overline{INT3}$	In	Interrupt signal (Nu)
51	RXD2	Out	8 bit serial port output to CPU
52	TXD2	In	8 bit serial port input from CPU
53	SCK2	In	Serial port shift clock input from CPU.
54	$\overline{IRQ0}$	Out	Interrupt request to CPU
55	A0	In	Address bus 0
56	A1	In	Address bus 1
57	A2	In	Address bus 2
58	A3	In	Address bus 3
59	A4	In	Address bus 4
60	A5	In	Address bus 5
61	GND	—	GND
62	VCC	—	+5V
63	A6	In	Address bus 6
64	A7	In	Address bus 7
65	A8	In	Address bus 8
66	A9	In	Address bus 9
67	A10	In	Address bus 10
68	A11	In	Address bus 11
69	A12	In	Address bus 12
70	A13	In	Address bus 13
71	A14	In	Address bus 14
72	A15	In	Address bus 15
73	A16	In	Address bus 16
74	A17	In	Address bus 17
75	A18	In	Address bus 18
76	A19	In	Address bus 19
77	A20	In	Address bus 20
78	A21	In	Address bus 21
79	A22	In	Address bus 22
80	$\overline{LCDC}$	—	LCD CS (NU)
81	A23	In	Address bus 23
82	TRGI	In	Dot pulse control/drive signal
83	$\overline{PTMG}$	Out	Printer timing signal
84	$\overline{PRST}$	Out	Printer reset signal
85	$\overline{INT4}$	In	Interrupt signal (NU)
86	$\overline{IPLON}$	In	To option connector
87	MD1	In	Mode select input (+5V)
88	MD0	In	Mode select input (GND)
89	$\overline{TEST}$	In	+5V
90	MA15	—	Image address 15 (NU)
91	MA18	—	Nu
92	MA19	—	Nu
93	RCVRDY1	—	Nu
94	RCVRDY2	—	Nu
95	RC0	—	Remote control encord signal for CPU
96	IRTX	—	I/R output for LED
97	UASCK	—	I/R serial data shift clock
98	$\overline{UARX}$	—	I/R serial data for CPU
99	$\overline{UATX}$	—	I/R serial data from CPU
100	VCC	—	+5V
101	GND	—	GND
102	$\overline{IRRX}$	—	I/R input from I/R unit
103	$\overline{RCI}$	—	I/R input from I/R unit
104	DAX1	—	System clock (7.3728MHz)

Pin No.	Signal name	In/ Out	Function	
105	DAX2	—	Nu	
106	$\overline{MCR1}$	—	Nu	
107	$\overline{MCR2}$	—	Nu	
108	$\overline{WAIT}$	Out	Wait request signal	
109	$\overline{EXWAIT}$	In	External wait control input signal	
110	RA18	Out	Nu	
111	RA17	Out	Nu	
112	GND	—	GND	
113	RA16	Out	Nu	
114	RA15	Out	Nu	
115	$\overline{RDO}$	Out	Expansion RD signal	Option
116	$\overline{WRO}$	Out	Expansion WR signal	
117	$\overline{EXINT3}$	In	Expansion interruption signal 3	Option
118	$\overline{EXINT2}$	In	Expansion interruption signal 2	
119	$\overline{EXINT1}$	In	Expansion interruption signal 1	
120	$\overline{EXINT0}$	In	Expansion interruption signal 0	
121	$\overline{OPTCS}$	Out	Chip select base signal for expansion option	
122	$\overline{ROS1}$	Out	ROM 1 chip select signal	
123	$\overline{ROS2}$	Out	ROM 2 chip select signal	
124	RAS2	Out	RAM 2 chip select signal	
125	RAS1	Out	RAM 1 ship select signal	
126	RJRST	In	Printer reset signal	
127	RJTMG	In	Printer timing signal	
128	DT4	Out	Printer dot signal 4	
129	DT3	Out	Printer dot signal 3	
130	DT2	Out	Printer dot signal 2	
131	DT1	Out	Printer dot signal 1	
132	GND	—	GND	
133	DT7	Out	Printer dot signal 7	
134	DT6	Out	Printer dot signal 6	
135	DT5	Out	Printer dot signal 5	
136	$\overline{MTD}$	Out	Printer motor $\overline{drive}$ signal	
137	MTD	Out	Printer motor drive signal	
138	DOT9	—	Printer dot signal 9 (NU)	
139	DOT8	—	Printer dot signal 8 (NU)	
140	SYNC	—	Nu (+5V)	
141	$\overline{ASKRX}$	—	I/R input from I/R unit	
142	VCC	—	+5V	
143	GND	—	GND	
144	—	—	Nu	
145	RAS3	Out	Nu	
146	RJMTR	In	Printer motor lock detection signal (NU)	
147	SLMTD	In	Nu	
148	SLMTS	In	Nu	
149	SLMTR	In	GND	
150	HTS2	Out	Nu	
151	SCK2	Out	Nu	
152	STH2	In	Nu	
153	—	—	Nu	
154	—	—	Nu	
155	—	—	Nu	
156	—	—	Nu	
157	—	—	Nu	
158	LCDWT	—	Nu	
159	DOTEN	Out	Dot drive enable signal	
160	RASP	—	Nu	

2-3. CKDC6 (HD404728A91FS)

1) General description

The CKDC6 is a 4-bit microcomputer developed for the ER-A460/A470 and provides functions to control the real-time clock, keys, and displays. The basic functions of the CKDC6 are shown below.

Keys: The CKDC6 is capable of controlling a maximum of 256 momentary keys. (Sharp 2-key rollover control)
Simultaneous scanning of key and switch
(When a key is scanned, the state of a mode and clerk switch is also buffered. The host can scan the state of switch together with the key entry data at the same time the key is scanned.)

Switches: Mode switch with 14 positions maximum
8-bit clerk (cashier) switch
2-bit feed switch
1-bit receipt on/off switch
1-bit option switch
4-bit general-purpose switch (1-bit is used for keyboard select)

Displays: 16-column dot display
12-column 7-segment display (column digit selectable)
All column blink controlled for the dot and 7-segment display decimal point and indicators
Programmable patterns for 7-segment display:
Four patterns
Internal driver for 7-segment display

Buzzer: Single tone control

Clock: Year, month, day of month, day of week, hour, minute

Alarm: Hour, minute

Interrupt request (event control):
Detection of key input, switch position change, alarm issue, and counter overflow

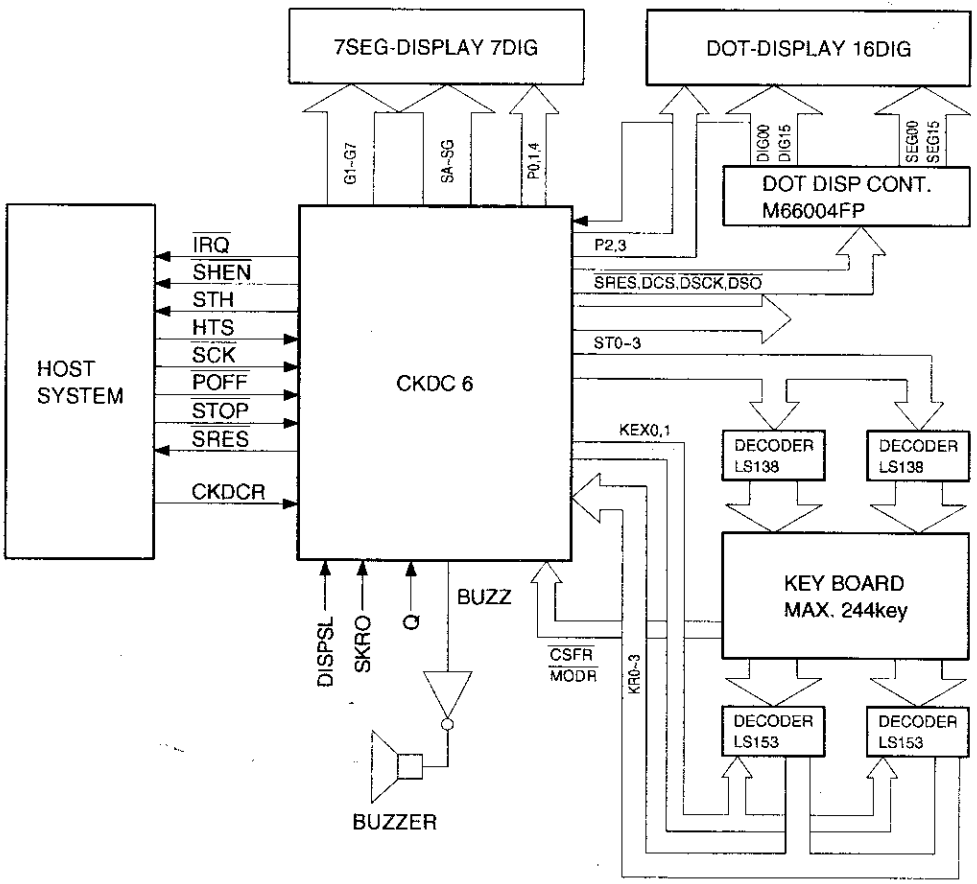

Fig. 2-5

2) Pin assignment

Pin No.	Port	I/O	RESET State	Signal name	I/O	Notes	PULL-UP -DOWN
1	$R0_1$	I/O	H-Z	SB	O	DB4 : SEG-B	PULL-DOWN
2	$R0_2$	I/O	H-Z	SC	O	DB4 : SEG-C	PULL-DOWN
3	$R0_3$	I/O	H-Z	SD	O	DB4 : SEG-D	PULL-DOWN
4	$R1_0$	I/O	H-Z	SE	O	DB4 : SEG-E	PULL-DOWN
5	$R1_1$	I/O	H-Z	SF	O	DB4 : SEG-F	PULL-DOWN
6	$R1_2$	I/O	H-Z	SG	O	DB4 : SEG-G	PULL-DOWN
7	$R1_3$	I/O	H-Z		O	DB7 : 7SEG COM	PULL-DOWN
8	$R2_0$	I/O	H-Z		O	DB2 : DOT DP	PULL-DOWN
9	$R2_1$	I/O	H-Z		O	DB3 : DOT COM	PULL-DOWN
10	$R2_2$	I/O	H-Z	DP	O	DB5 : 7SEG DP	PULL-DOWN
11	$R2_3$	I/O	H-Z	ID	O	DB5 : 7SEG ID	PULL-DOWN
12	RA_0	I	I	$\overline{MODR}$	I	MODE RETURN	PULL-UP
13	RA_1	I	I	$\overline{CFSR}$	I	CLEARK, FEED, SWITCH RETURN	PULL-UP
14	$R3_0$	I/O	H-Z	KEX0	O	KEY EXCHANGE0	
15	$R3_1$	I/O	H-Z	KEX1	O	KEY EXCHANGE1	
16	$R3_2$	I/O	H-Z	NU	O	GND	
17	$R3_3$	I/O	H-Z	NU	O	GND	
18	$R5_0$	I/O	I	ST0	O	KEY SCAN ST0	
19	$R5_1$	I/O	I	ST1	O	KEY SCAN ST1	
20	$R5_2$	I/O	I	ST2	O	KEY SCAN ST2	
21	$R5_3$	I/O	I	ST3	O	KEY SCAN ST3	
22	$R6_0$/INT0	I/O	I	$\overline{POFF}$	I	P-OFF	
23	$R6_1$/INT1	I/O	I	$\overline{STOP}$	I	STOP	PULL-UP
24	$R6_2$/INT2	I/O	I	$\overline{DDIG}$	O	+5V	
25	$R6_3$/INT3	I/O	I	$\overline{DCS}$	O	DOT DISPLAY CONT./CS	
26	Vcc			VCC		+5V	
27	$R4_0$/SCK	I/O	I	$\overline{SCK}$	I	SCK	
28	$R4_1$/SI	I/O	I	HTS	I	HTS	
29	$R4_2$/SO	I/O	I	STH	O	STH	
30	$R4_3$/PWM	I/O	I	SDISP	I	+5V	
31	$R7_0$/BUZZ	I/O	I	BUZZ	O	BUZZER	
32	$R7_1$/SCK2	I/O	I	$\overline{DSCK}$	O	DOT DISP CONT. SCK	
33	$R7_2$/SI2	I/O	I	$\overline{SRES}$	O	SYSTEM RESET	PULL-DOWN

Pin No.	Port	I/O	RESET State	Signal name	I/O	Notes	PULL-UP -DOWN
34	$R7_3$/SO2	I/O	O	DSO	O	DOT DISP CONT. SO	
35	$R8_0$	I/O	O	$\overline{SHEN}$	O	$\overline{SHEN}$	
36	$R8_1$	I/O	O	$\overline{KRQ}$	O	KEY REQUEST	
37	$R9_0$	I	I	$\overline{KR0}$	I	KEY RETURN 0	
38	$R9_1$	I	I	$\overline{KR1}$	I	KEY RETURN 1	
39	$R9_2$	I	I	$\overline{KR2}$	I	KEY RETURN 2	
40	$R9_3$	I	I	$\overline{KR3}$	I	KEY RETURN 3	
41	RESET	I	I	CKDCR	I	CKDC IV RESET	
42	OSC2					4.19 MHz X'tal	
43	OSC1						
44	GND					GND	
45	CL1					32.768 KHz OSC	
46	CL2						
47	TEST	I	I	VCKDC		5V	
48	D0	I/O	H-Z	G1	O	7 SEG DIG 1	PULL-DOWN
49	D1	I/O	H-Z	G2	O	7 SEG DIG 2	PULL-DOWN
50	D2	I/O	H-Z	G3	O	7 SEG DIG 3	PULL-DOWN
51	D3	I/O	H-Z	G4	I	7 SEG DIG 4	PULL-DOWN
52	D4	I/O	H-Z	G5	O	7 SEG DIG 5	PULL-DOWN
53	D5	I/O	H-Z	G6	O	7 SEG DIG 6	PULL-DOWN
54	D6	I/O	H-Z	G7	O	7 SEG DIG 7	PULL-DOWN
55	D7	I/O	H-Z	G8	O	7 SEG DIG 8	PULL-DOWN
56	D8	I/O	H-Z	G9	O	7 SEG DIG 9	PULL-DOWN
57	D9	I/O	H-Z	G10	O	7 SEG DIG 10	PULL-DOWN
58	D10	I/O	H-Z	NU	O		PULL-DOWN
59	D11	I/O	H-Z	NU	O		
60	D12	I/O	H-Z	NU	O		
61	D13	I/O	H-Z	NU	O		
62	D14	I/O	H-Z	NU	O		
63	D15	I/O	H-Z	NU	O		
64	$R0_0$	I/O	H-Z	SA	O	DB4 : SEG-A	PULL-DOWN

NOTE 3: Pull-up/down in the table indicates that the lines concerned require external pull-up/down resistance.

3. Clock generator

1) CPU (HD64151010FX)

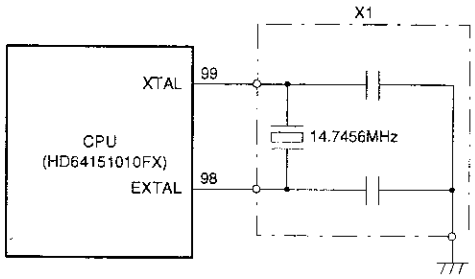

Fig. 3-1

Basic clock is supplied from a 14.7456MHz ceramic oscillator.
The CPU contains an oscillation circuit from which the basic clock is internally driven. If the CPU was not operating properly, the signal does not appear on this line in most cases.

2) HD404728A91FS CKDC6 oscillation circuit (Display-PWB)

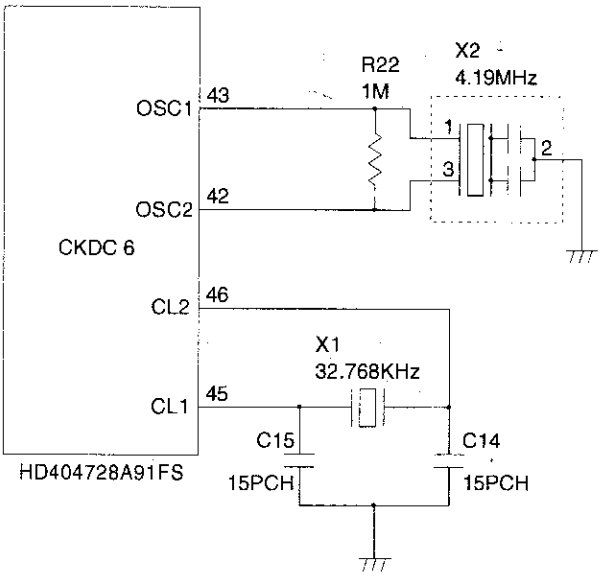

Fig. 3-2

Two oscillators are connected to the CKDC6.
The main clock X2 generates 4.19MHz which is used during power on.
When power is turned off, the CKDC6 goes into the standby mode and the main clock stops.
The sub-clock X1 generates 32.768KHz which is primarily used to update the internal RTC (real time clock). During the standby mode, it keeps oscillating to update the clock and monitoring the power recovery.

4. Reset (POFF) circuit

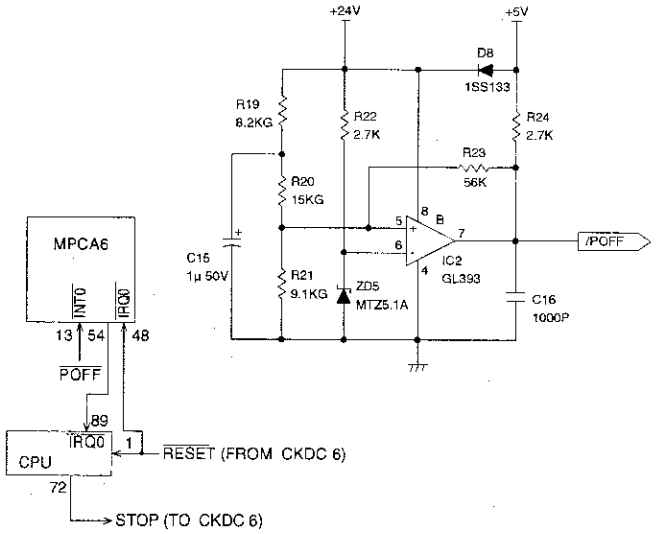

Fig. 4-1

In order to prevent memory loss at a time of power off and power supply failure of the ECR, the power supply condition is monitored at all times. When a power failure is met, the CPU suspends the execution of the current program and immediately executes the power-off program to save the data in the CPU registers in the external S-RAM with the signal $\overline{\text{STOP}}$ forced low to prepare for the power-off situation. The signal $\overline{\text{STOP}}$ is supplied to the CKDC6 as signal $\overline{\text{RESET}}$ to reset the devices.
This circuit monitors +24V supply voltage.
The voltage at the (–) pin of the comparator GL393 is always maintained to 5.1V by means of the zener diode ZD5, while +24V supply voltage is divided through the resistors R19, R20, and R21, and is applied to the (+) pin. When normal +24V is in supply, 6.8V is supplied to the (+) pin, therefore, signal $\overline{\text{POFF}}$ is at a high level. When +24V supply voltage decreases due to a power off or any other reason, the voltage at the (+) pin also decreases. When +24V supply voltage drops, the voltage at the (+) pin drops below +5.1V, which causes $\overline{\text{POFF}}$ to go low, thus predicting the power-off situation.

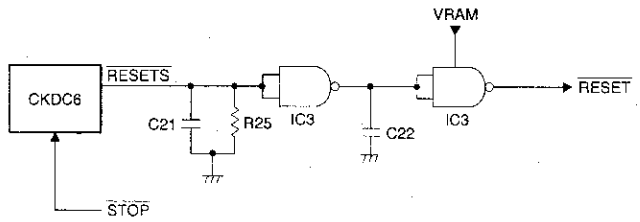

The $\overline{\text{STOP}}$ signal from the CPU is converted into the $\overline{\text{RESETS}}$ signal by the CKDC6.
The $\overline{\text{RESETS}}$ signal from the CKDC6 is converted into the $\overline{\text{RESET}}$ signal at the gate backed-up by the VRAM power, performing the system reset.

5. Memory control

1) Memory map

① **All range memory map**

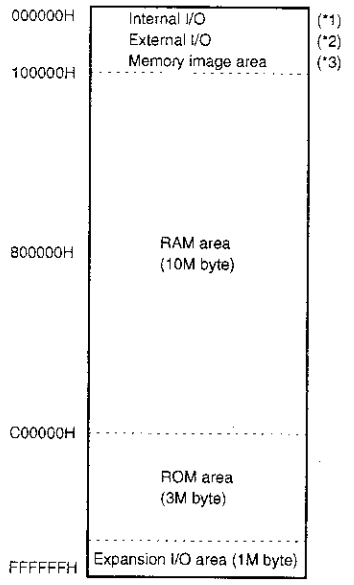

Fig. 5-1

(*1) "Internal I/O" means the registers in the H8/510.

(*2) "External I/O" means the base system I/O area to be addressed in page 0.

(*3) "Memory image area" means the lower 32KB of ROM area which is projected to 000000H ~ 007FFFH for allowing reset start and other vector addressing, or the lower 32KB of ROM area which is projected to 008000H ~ 00FE7FH for allowing 0 page addressing of work RAM area.

(*4) "Expansion I/O" means expansion I/O device area which isaddressed to area other than page 0.

② **0 page memory map**

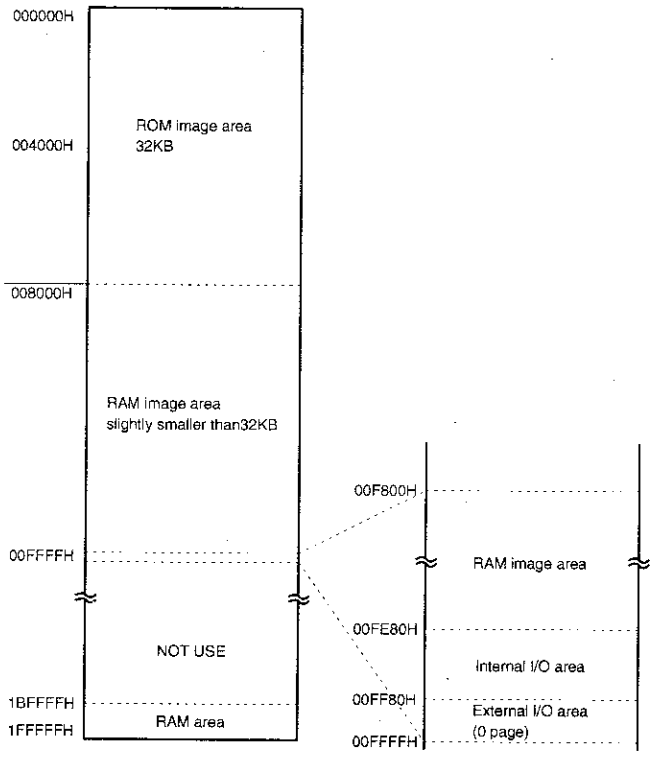

Fig. 5-2

- ROM image area: Image is formed in ROM area address C00000H C07FFFH. This area is identical to IPL ROM area which will beseparately developed.
- RAM image area: Image is formed in RAM area address 1D8000H1DFE7FH. (*Note)

  * Note: Image can be formed in lower 32KB of RAS2.

③ **ROM area memory map**

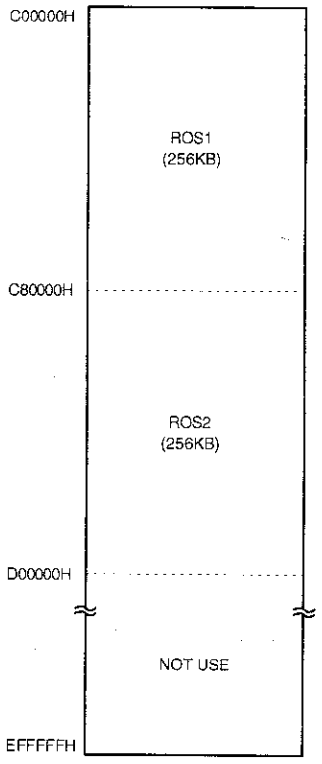

Fig. 5-3

These two decode signals decode 512KB space respectively and canbe used with max. 4MB ROM.

* Note: The lower 32KB of ROS1 signal is formed as OR of image area in 0page.

④ **RAM area memory map**

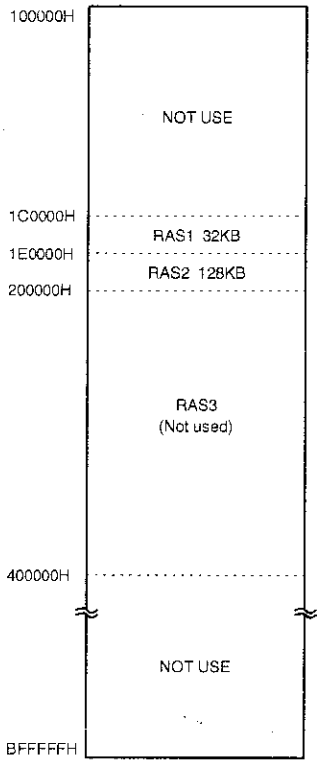

Fig. 5-4

In the three RAM chip select, the following address is decoded.

CS signal	Address
• RAS1	1C0000H~1DFFFFH (008000H~00FE7FH) ⁎ Note
• RAS2	1E0000H~1FFFFFH (008000H~00FE7FH) ⁎ Note
• RAS3	200000H~3FFFFFH

⁎ Base signal is for 2M.

⁎ Note: RAS1 signal is formed as OR in the image area of 0 page.j (Lower 32KB).
RAS2 signal is formed as OR in the image area of 0 page. (lower32KB).

⑤ **I/O area memory map**

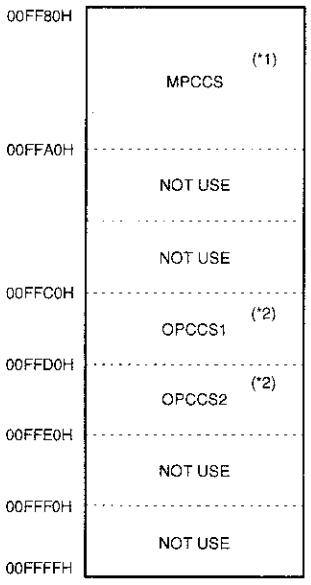

Fig. 5-5

⁎ Note 1: MPCCS signal is the base signal for MPCA6 internal registerdecoding, and does not exist as an internal signal.

⁎ Note 2: OPCCS1 and OPCCS2 signals are decoded in the OPC (optionperipheral controller) using the base signal OPTCS for optiondecoding. They does not exist as external signals.

2) Block diagram

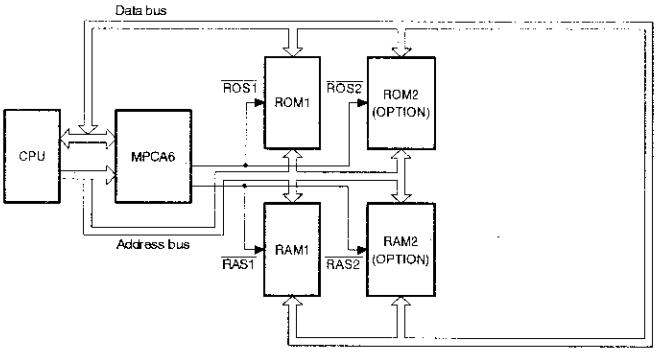

Fig. 5-6

① **ROM control**

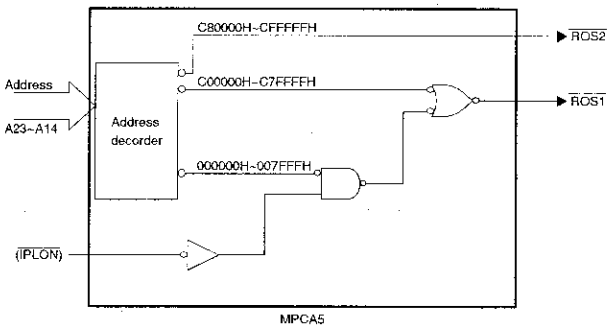

Fig. 5-7

IPLON: IPL board detection signal incorporated in the option slot. Note used in the ER-A460/A470. (Not used)

Access is performed with two ROM chip select signals $\overline{ROS1}$ and $\overline{ROS2}$, which decode 512KB address area respectively to accessmax. 4MB ROM.

② **RAM control**

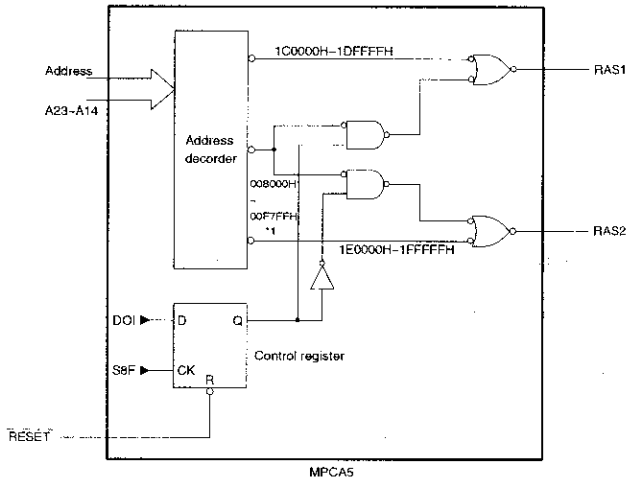

Fig. 5-8

Access is performed with two RAM chip select signals RAS1, RAS2 and RAS3. The control register in MPCA6 allows selection of pageimage memory area. (RAS1 is selected for initializing.)

⁎ : For 0 page image area, selection between RAS1 and RAS2 can bemade with the control register. The 0 page control registerperforms initializing at the timing of no stack processimmediately after resetting.

6. SSP circuit

1) Block diagram

This is the circuit employed to do the Special Service Preset(SSP).

(Block diagram)

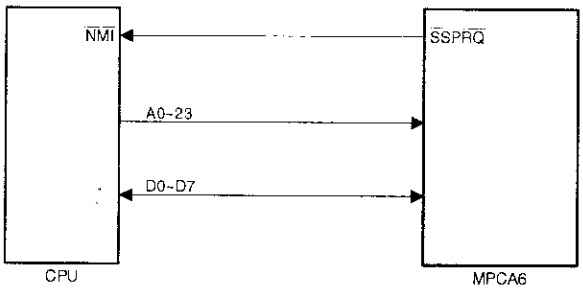

Fig. 6-1

(MPCA6 block diagram)

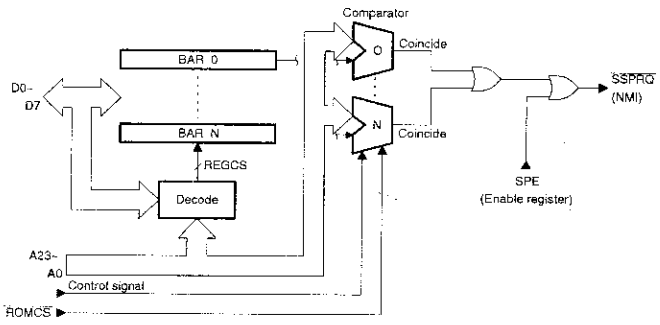

Fig. 6-2

As the address detection system, the brake address register comparison system is employed though the mapping system was employed in the conventional monitor RAM. The address registerlocated in MPCA is always compared with the system address bus to monitor and generate NMI signal at a synchronized timing and togo to NMI exception process.

In the exception process routine service routine, the entry address is checked to go to SSP sub routine.

Entry to the break address register (BAR) is performed through address FFFF00H or later decoded in MPCA6.

2) SSP register

The break address register (BAR) is accessed through direct address of FFFF00H~FFFFFFH. Entry number is 32 entry.

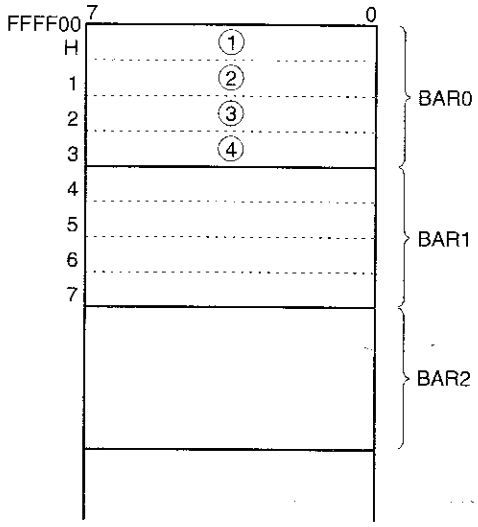

Fig. 6-3

Each BAR is composed of 4 byte address. Bit composition is as follows:

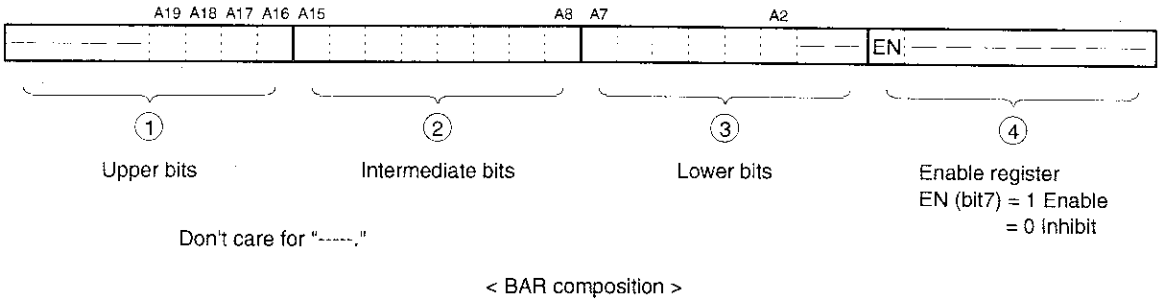

< BAR composition >

Fig. 6-4

④ is the enable register. The entry registers of the break address are assigned to ①, ②, and ③. Each bit of address corresponds to each bit position, writing to ①, ②, and ③ is performed without shifting. The corresponding area is 1MB space of ROS1 and ROS2.

3) SSP register access method

Access to SSP break address register is performed through the temporary register as shown below:

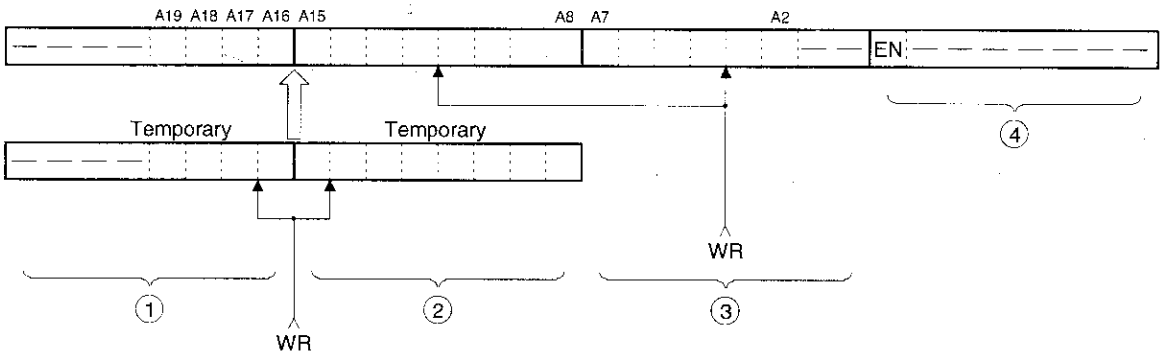

Fig. 6-5

Enable flags can be accessed individually.
Though enable register ④ can be accessed individually, writing to brake address registers ① and ② is performed at the same time as writing to brake address register ③ through the temporary register. Therefore, set ① and ② to temporary, then write into ③ at last.
Since the temporary register is commonly used by BAR sets, thefollowing register setting is performed after completion ofsetting of each break address register.

③ SSP control method

Access to the enable register and the brake address register is only possible when writing to them from the CPU.

bit 7	6	5	4	3	2	1	0	
0	0	0	CMP4	CMP3	CMP2	CMP1	CMP0	(FFFFFFH)

Information on which brake register the SSP brake is detected in is read as binary data by reading address FFFFFFH (*1).
Used in an expanded register.
Normally is a reserve bit. Whenreading, fixed to 0.

If there are 32 break registers, binary expression is made with the above 5 bits, and 0th is "00000_B" and 31st is "11111_B."

When detected simultaneously by two or more break registers, onewith the smaller BAR number is read as binary data.

The brake signals (NMI) and the above detection data (CMP0~4) areheld until the above detection data are read. So read should bemade in the NMI sub routine. (Clear by FFFFFFH read.)

* 1: FFFFFFH is not fulldecoded. (FFFF00H~FFFFFFH). Therefore,unnecessary read access in parentheses should not be performed.

7. PRINTER control circuit

1)Block diagram

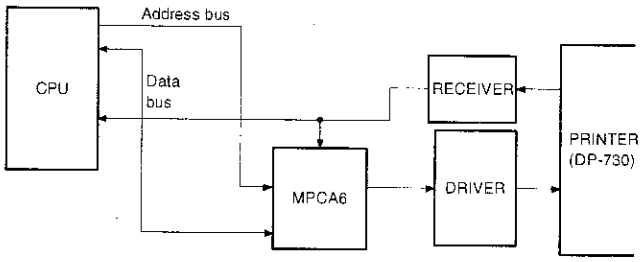

Fig. 7-1

2) General description of the printer controller

The DP-730 is used as the R/J printer. The printer mechanical timing control is made by the CPU through MPCA6.

3) Printer motor drive circuit

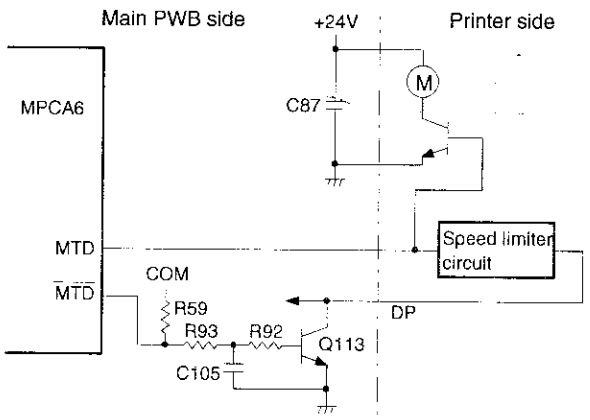

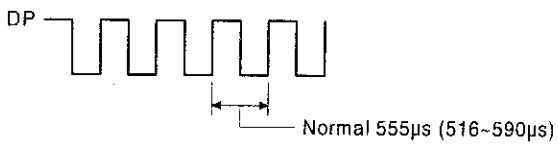

When the MTD is high, the motor rotates.
When the MTD is low, the motor stops.

<Motor lock protection>
When an abnormal load is applied to the mechanism, the DP (Dot Pulse) frequency is checked to prevent against the motor burn-out, the timing belt shift, and gear damage. If the following condition is made, the CPU stops the motor rotation.

① When starting the motor: When the cycle from starting to the 100th pulse of DP is 16ms. (The one pulse cycle of DP is normally 555us.)

② During constant rotation of the motor: When one pulse of DP is 1100us or more.

4) Printer sensor circuit

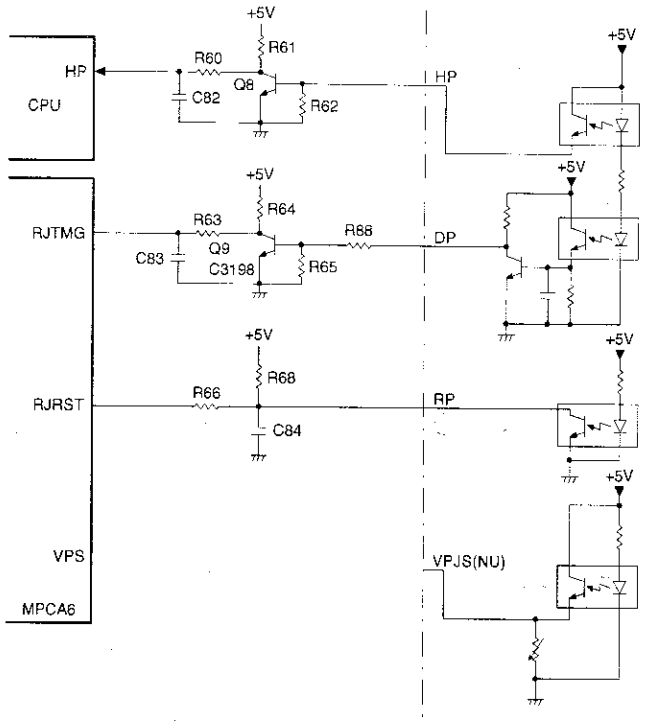

The printer supplies the RP (Reset Pulse) signal, the HP (Home Position) signal, and the DP (Dot Pulse) signal) to control printing timing and conduction timing of solenoids. It also supplies the VPJ signal to detect the presence of validation paper. These sensor are photo interrupters.

① RP (RJRST) signal
This signal is outputted once for every reciprocating motion of the print head. It indicates the reference position of the HP signal.
The rear edge of RP (OFF -- ON) is used as the signal.

② HP signal
The pulse signal is outputted from the slit in the disk installed to the DC motor shaft. It is used as the reference signal for starting counting of the DP signal. It is generated once for twenty DP signals. The rear edge of the HP signal (ON -- OFF) immediately after generation of the RP signal is used as the signal.

③ DP (RJTMG) signal
The pulse signal is outputted from the slit in the disk installed to the DC motor shaft. It is used as the control signal for the print solenoid and the paper feed solenoid.
The front edge of the output signal (ON -- OFF) is used as the signal.

④ VPJS (VPJ) signal
The presence of a validation card is detected by interruption of the photo interrupter LED light by the validation card.

Relation ship among RP/HP/DP

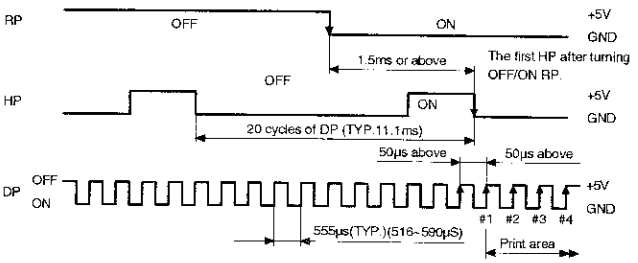

* The waveforms are those indicated with arrow in Fig.3-3.

5) Dot solenoid drive circuit

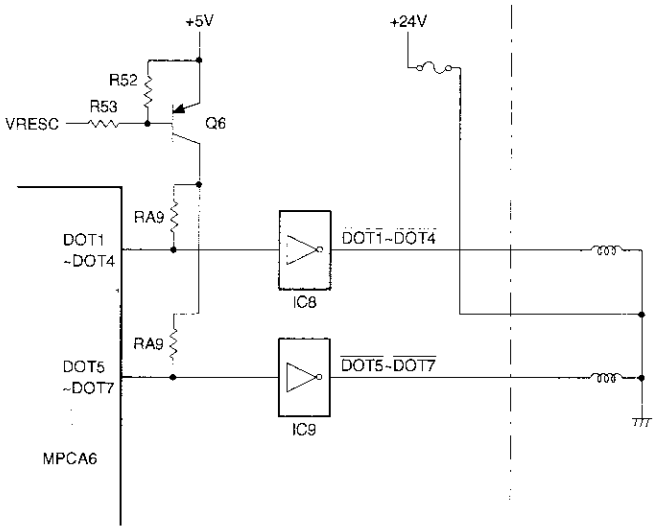

The DOT1 ~ DOT4 (the dot solenoid drive signals from the MPCA6) are pulled up by the VRESE and converted into LOW by the driver IC. A +24V voltage is applied to the solenoid. This operates the dot wire.

6) Paper feed circuit

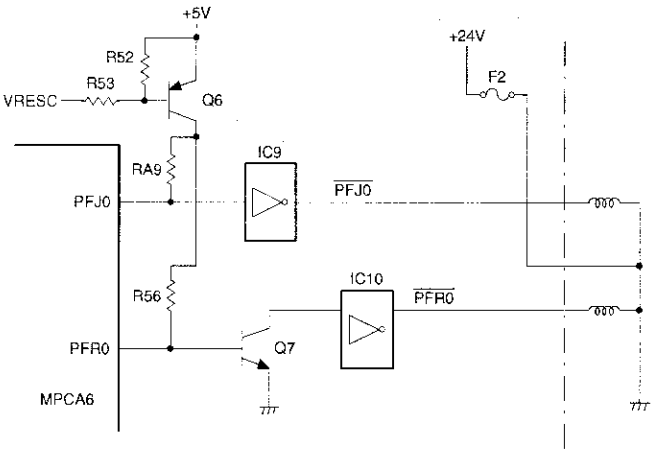

The PFJ0 (the journal paper fed signal from the MPCA6) and the PFR0 (the receipt paper feed signal) are pulled up by the VRESE and converted into LOW level. A +24V voltage is applied to the solenoid. This operates the paper feed solenoid.

7) Stamp circuit

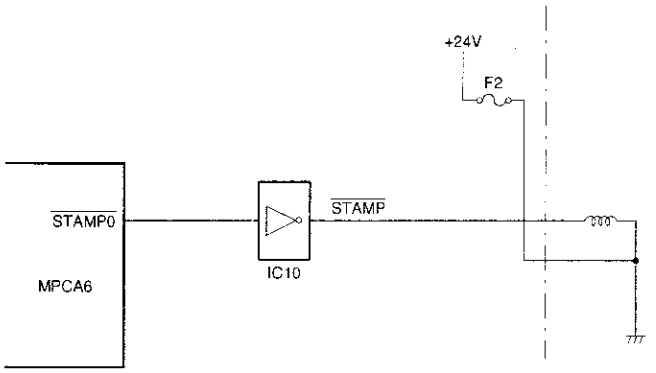

The STAMP0 (the stamp solenoid drive signal from the MPCA6) flows through the driver IC to the solenoid. A +24V voltage is applied to the solenoid. This operates the stamp.

8) Caution

CAUTION

If fuse F2 should be blown, the dot head solenoid may be shorted. Be sure to check the head impedance and driver breakdown.

When fuse F2 is blown:

① Remove F2, and perform the service resetting. The set the mode switch to a position other than SRV and SRV' and turn off the power.

② Install fuse F2 (1.5A) and turn on the power.
If the fuse blows with the above operation, driver STA401A may be shorted.

③ Turn off the power.

④ Disconnect the printer cable from the printer. Measure impedance between the printer body connector pin 5 and the following pins: 1, 3, 9, 11, 13, 21, 25
The impdenace must be 10.5Ω ± 10%.
If impedance is outside the above range, the dot solenoid is bad. Replace the dot head unit.

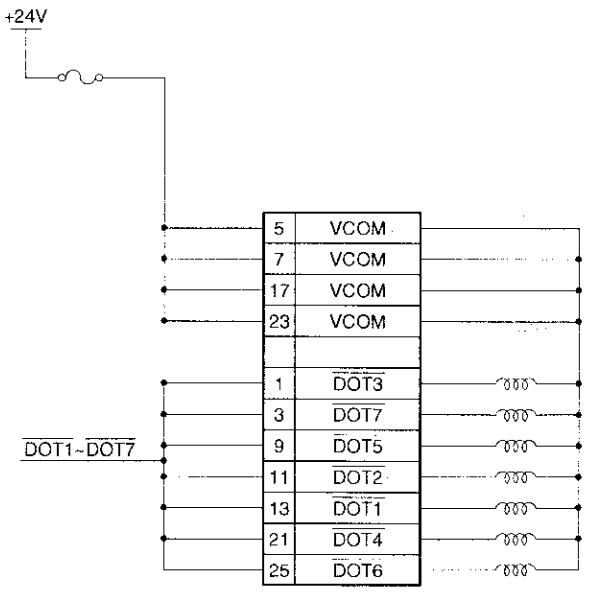

8. Drawer drive circuit

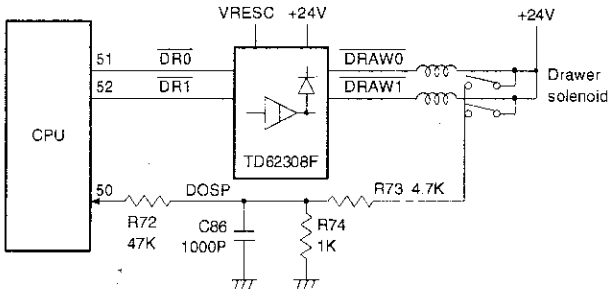

Fig. 8-1

The drawer is directly supported by the CPU. No action starts when the power supply is not steady as the output stage of the driver is pulled VP by VRESC signal.
Drawer open and close is sensed with the microswitch provided in the drawer whose signal is level converted with R74 and R73 and directly read by the CPU.

9. Key, display, timer, buzzer controls

The keys, switches, displays, timer/calendar, and buzzer are controlled by the CKDC-4 on the display PWB.

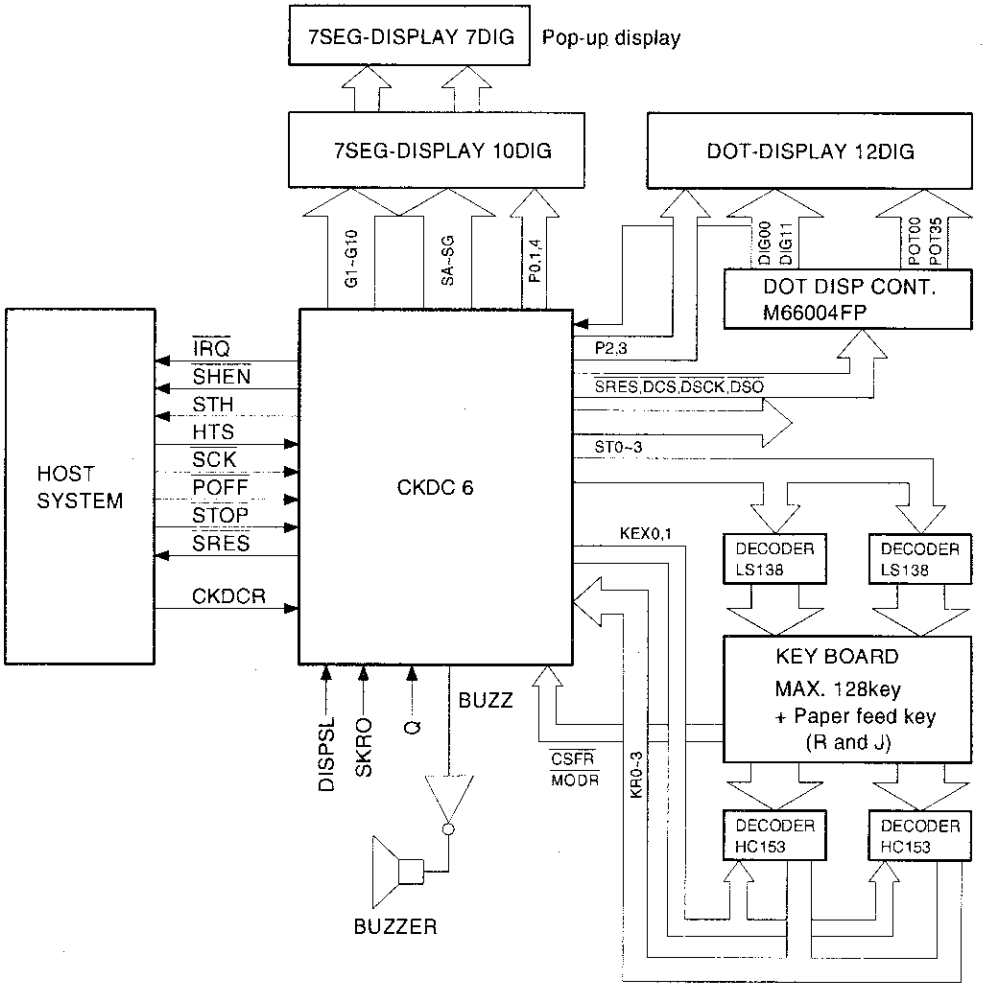

Block diagram
Fig. 9-1

1) Power on/off sequence

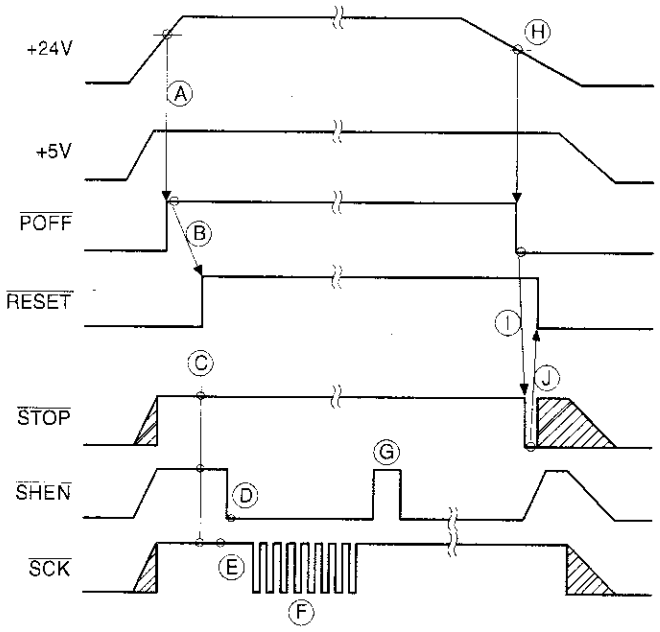

Fig. 9-2

Hatched area indicates logic unstable.

<At power on>

When +24V power rises, the signal POFF is forced high (A), by which time the +5V supply becomes stable. The CKDC6 monitors the state of POFF while updating the timer/calendar in the low power standby mode, and when the high state of POFF is detected, the system reset signal (RESET) is set high (B), by which time the output lines STOP and SCK of the CPU and MPCA6 have been initialized to high, respectively (C). Thereafter, the CKDC6 sets SHEN active (low) (D) to notify the CPU of the command/data communication ready state.
One byte data/command can be transferred with eight SCK pulses (F). When one byte has been transferred with eight SCK pulses, the CKDC6 sets SHEN high to initiate internal processing. After completion of the internal processing, when the next byte transfer becomes ready, the CKDC6 sets SHEN back to a low state to wait for the next byte transfer (G).
Thereafter, the SHEN and SCK timing described above is repeated to carry on the communication.

<At power off>

When +24V power drops, POFF goes low (H).
A low on the POFF line causes a low level interrupt request which is sent the IRQ0 pin of the CPU. Within a maximum of 10msec of the low level IRQ0 input, the CPU performs software processing necessary for power-off, after which the STOP output is set low (I).
When STOP goes low, the CKDC6 sets RESET low to reset the whole system (J). And, the +5V supply is held at 4.75V or higher voltage, after which the voltage drops to a level that the logic circuit does not operate.

2) Key and switch scanning

Strobes ST0 ~ ST3 are decoded on the keyboard by two 74LS138 3-to-8 decoders to generate 16 strobe signals of S15 ~ S0.
The key matrix consists of 16 strobe lines and 16 returns lines of KR0A, KR1A, KR2A, KR3A, KR0B, KR1B, KR2B, and KR3B.
To minimize interfacing lines between the CKDC6 and the keyboard unit, two multiplexers (74HC153) are used to multiplex signals by the timing controlled with the signals KEX0 and KEX1 which are sent to the CKDC6 on the return lines of KR0 ~ KR3.

Timing ST

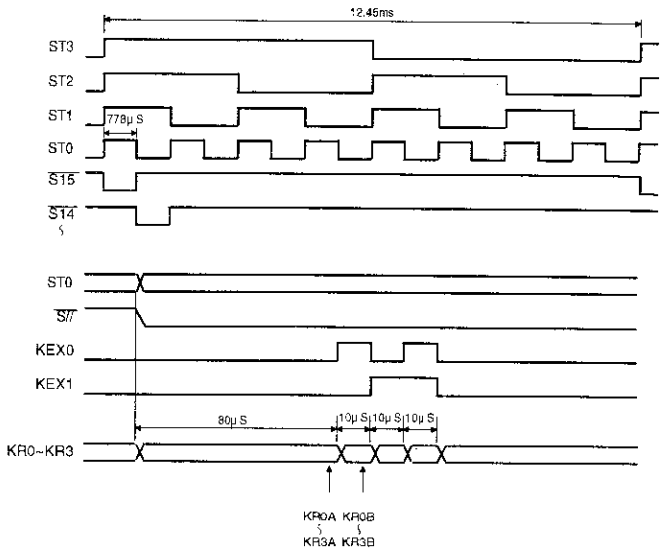

Fig. 9-3

The mode switch in provided with a special return line MODR, apart from the above return lines.
In the same manner, the clerk, paper feed key (J/R), and receipt on/off switches use CFSR as the return line.

3) DISPLAY CONTROL

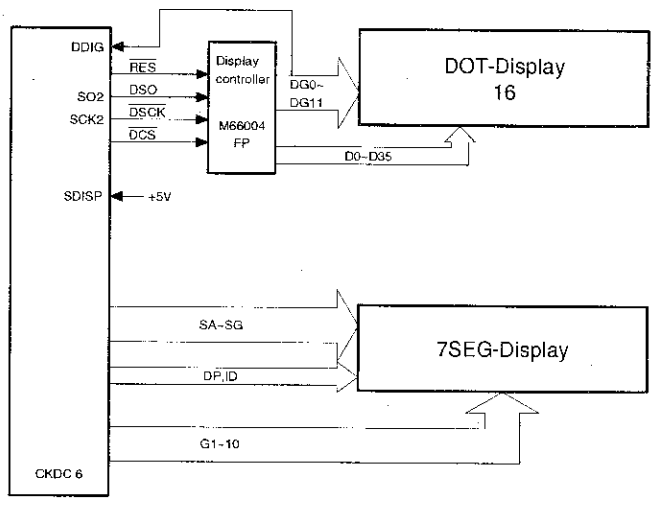

Fig. 9-4

CKDC6 directly drives the 7-segment display unit and the dot display is driven via M66004FP.

<7-segment display>

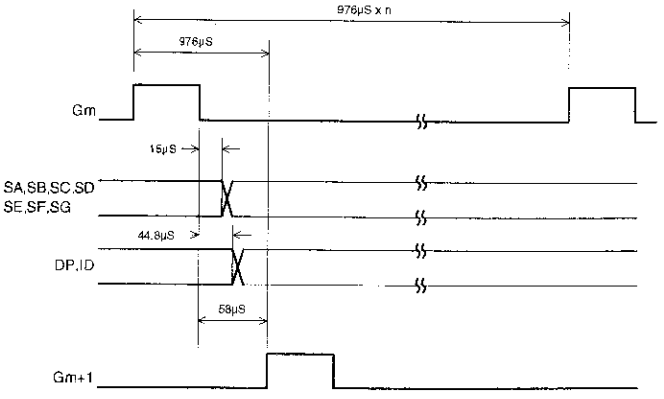

Fig. 9-5

<Dot display>

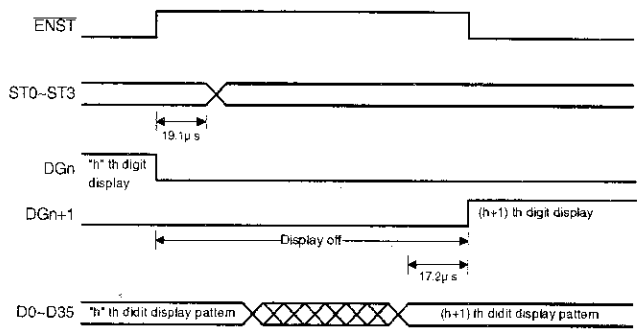

Fig. 9-6

IMPORTANT:

The CKDC6 lines are not high voltage resistive ports. Damage may occur to the CKDC6 if lines are shorted carelessly when using oscilloscope probes.

- Dot matrix tube
  A 4-bit binary output signals (ST0-ST3) from CDKC6 are converted into the digit drive signal (DG0-DG11) in the M66004FP.

<Dot display control>

The CKDC6 controls the character segment (5 x 7) and the indicator of the dot display by using the controller (M66004FP) for dot display control.

① M66004FP/Dot display control signal

Signal name	Contents	Pin/Remark
DSO	Serial data output signal for M66004FP	C-MOS pin
$\overline{\text{DSCK}}$	Serial shift clock output signal for M66004FP	C-MOS pin. Requires to be pulled up
$\overline{\text{DCS}}$	Chip select output signal for M66004FP	C-MOS pin

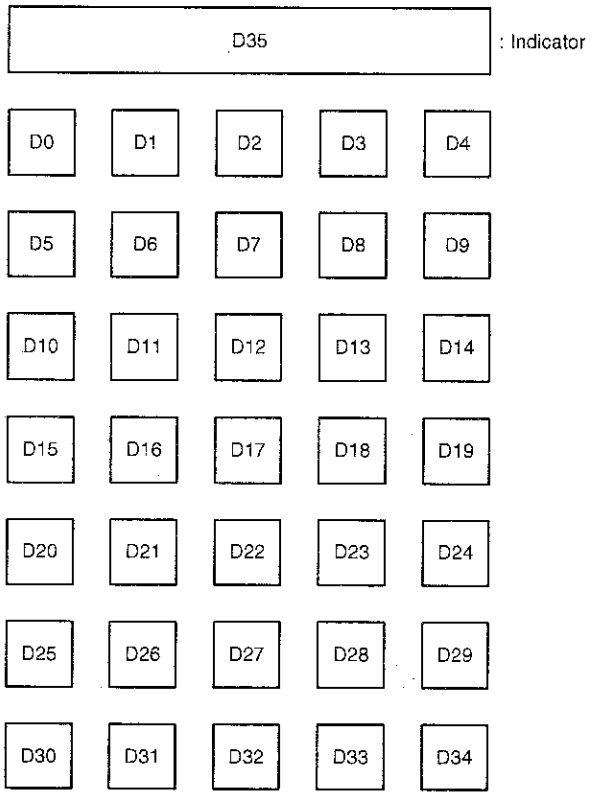

10. Power supply circuit

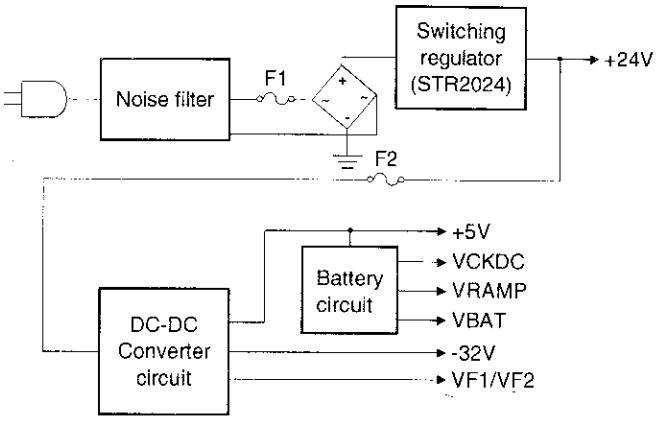

Fig. 10-1

+24V:	Printer, solenoid power
+5V:	VCC (Logic power)
VBAT:	Battery charge
-32V:	Display tube power
VF1, VF2:	Display tube power (AC)
VRAM:	Battery back-uped power
VCKDC:	CKDC-4 Back-up power

11. Switching regulator circuit

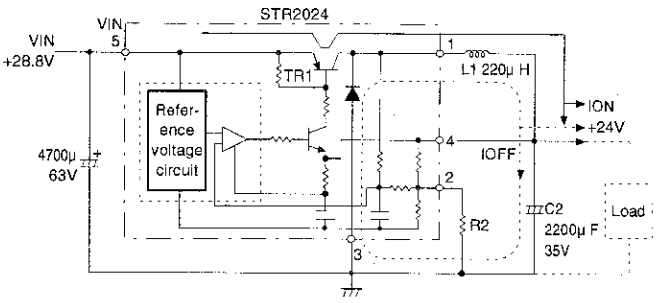

Fig. 11-1

By switching VIN (+28.8V) by the transistor TR1 within the STR2024, DC+24V supply is obtained through the LC network. Stable +24V is obtained by controlling on/off duty of TR1.

ION: Current when TR1 is on.
IOFF: Current when TR1 is off.

12. I/R communication circuit

- In the ER-A460/A470, infra-red data transmission of the optical communication system is performed.

System	IRDA	ASK	REMOTE KEYBOARD
Carrier wave	950 nm	900 ~ 1050 nm	900 ~ 950 nm
Sub-carrier wave	(16 times of baud rate clock)	500 kHz±10%	33 ~ 40 kHz
Modulation system	"0": HIGH level "1": LOW level Only around the center of the bit cycle in HIGH level, 3/16 of the bit cycle is set HIGH, and the rest is set LOW.	Pulse modulation: The pulse array of data code is modulated by the AM system. Primary modulation: The sub-carrier waveform is amplitude-modulated with this pulse array. Secondary modulation: With the sub-carrier waveform which was modulated in the primary modulation, infra-red rays are amplitude-modulated.	Pulse modulation: The pulse array is modulated by data codes in the PPM system. Primary modulation: The sub-carrier waveform is amplitude-modulated with this pulse array. Secondary modulation: With the sub-carrier waveform which was modulated in the primary modulation, infra-red rays are amplitude-modulated.
Modulated waveform	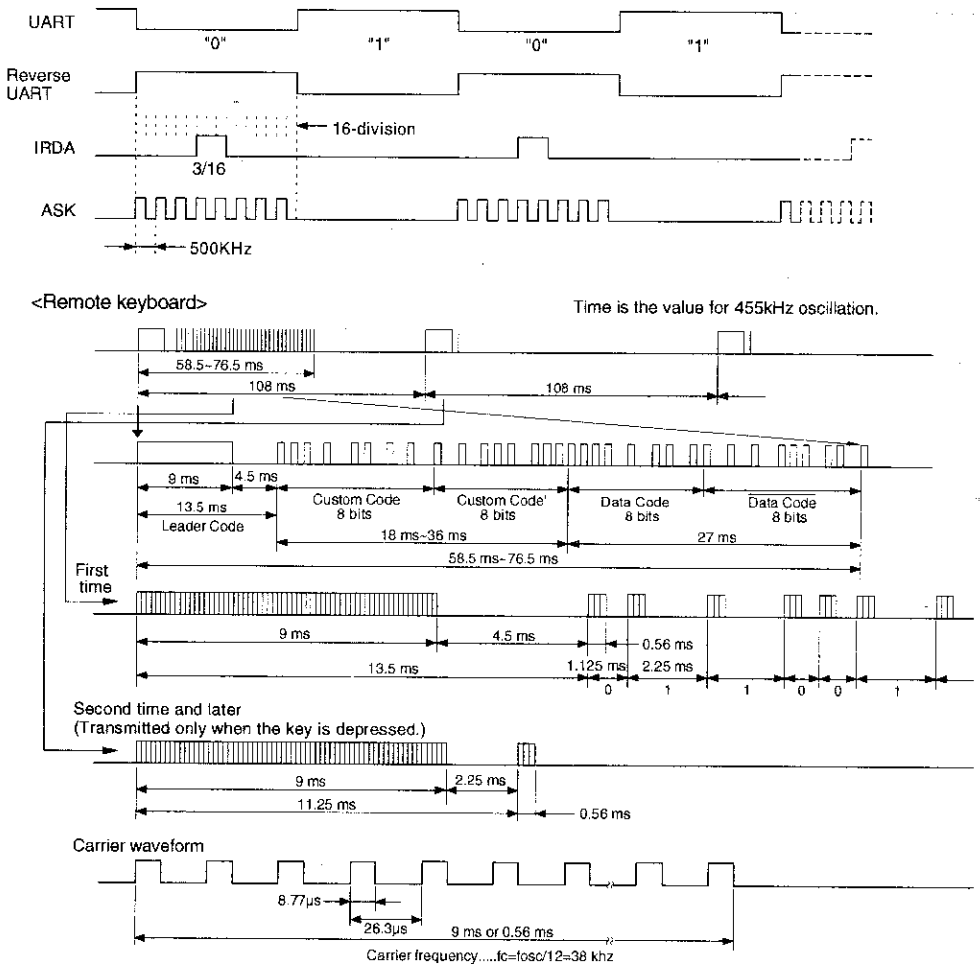		
Baud rate	2.4 ~ 115.2 kbps	9.6 ~ 57.6 kbps (ZR-5000: 9600 bps)	—
Serial communication system	Start-stop synchronization system Data length: 8bit Parity: None Stop bit: 1	Start-stop synchronization system Data length: 8bit Parity: ODD Stop bit: 1	—
Transmission distance	About 0.75m: ECR to ECR Min. 0.65m	About 0.75m: ECR to ECR Min. 0.65m	About 1m

Reception circuit

The infra-red signals which was transmitted from the transmission unit through the air is received by the photo diode, and sent through the two-system circuit to the MPCA6, where they are modulated and inputted to the CPU.

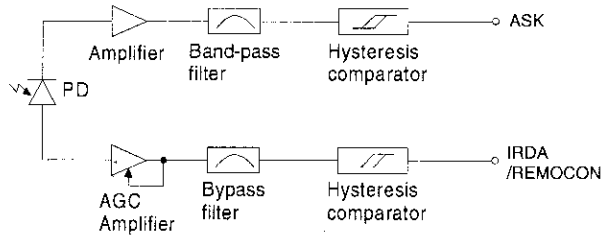

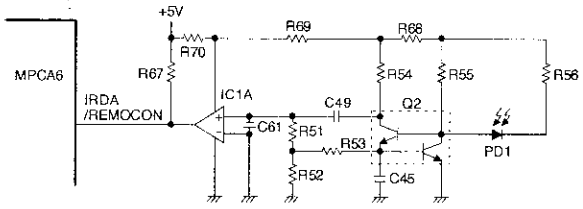

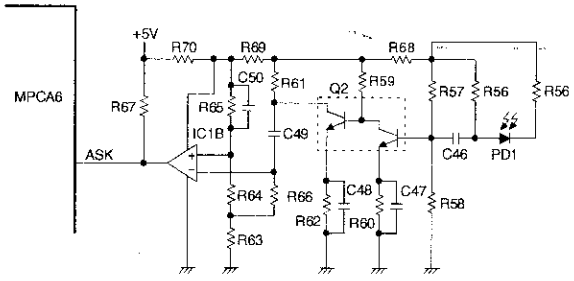

Transmission circuit

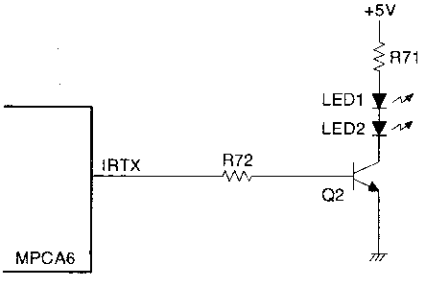

With the IRTX signal from the MPCA6, Q2 is turned on/off to light LED1, 2. To strengthen the light intensity, two LED's are used.

CHAPTER 5. TEST FUNCTION

1. General

1) This diagnostic program has been developed for diagnosing machine functions in the field. The program is contained within the ER-A460/A470.
The diagnostic program is stored in the external ROM which will be executed by the CPU (H8/510) which requires the following diagnostic operations:

a) Proper power supply voltages are mandatory for logic circuits (+5V, VRAM, VCKDC, POFF, +24V).

b) CPU input/output pins, CPU internal logic, CKDC6, MPCA6, address decoder, address bus, data bus, and common ROM/RAM must be working properly.

2. Operational procedure

To start the diagnostic program, you must enter the following command.
3-digit test item number → [TL] key in the SRV mode.
The key assignment must be properly set and the ROM and RAM must be operating properly to go into this mode. This is necessary because the control jumps to the program area in the SRV mode. A master reset must be performed before operating the ECR for the first time. After any option is installed, a program reset is required. When the master reset or program reset is performed, be sure to check the printout on the journal paper.

Master reset:	Turn power on in the SRV' mode and change it to the SRV mode with the [JF] key pressed.
Journal print:	MASTER RESET ***
Program reset:	Turn power on in the SRV' mode and change it to the SRV mode.
Journal print:	PRG. RESET ***

3. Test command list

With the SRV mode and the following command entry, the test starts.

Code	Description
100	Display test-1
101	Key and clerk switch position code display
102	R/J printer test
104	Keyboard test
105	Mode switch test
106	Validation sensor and near end sensor test*1
108	Calendar oscillator test
109	SSP test
110	Drawer-1 open and sensor test
111	Drawer-2 open and sensor test
116	Display test-2
117	I/R interface test reception side
118	I/F interface test transmission side
120	Standard RAM test
130	Standard ROM test
150	R/J printer dot pulse width adjustment
200	Option RAM chip test
400	Option ROM chip test

*1 Validation sensor is not used.

[1] Display test-1

① Key operation
100 → [TL]

② Functional description
The following is displayed:

Front display

DOT DISPLAY: 1 2 3 4 5 6 7 8 9 0 A B
7-SEGMENT DISPLAY: 1 2 3 4 5 6 7 8 9 0

Operator display

4 5 6 7 8 9 0

③ Check the following items:

a) Check for proper activation of display elements.

b) Check for blur, uneven illumination, and partial omission.

④ Test termination
Press any key. The test terminates with the test and message printed.

Test termination print	100

[2] Key, clerk, and switch position code display

① Key operation
101 → [TL]

DOT DISPLAY: C L K / K E Y S R V
7-SEGMENT DISPLAY: ○○○ – – ○○○ – –
Person-in-charge code
Key position code

② Functional description
Key, clerk, and receipt switch codes are displayed.

③ Check the following items:
Change key and switch positions for proper display activation.

Clerk code:	1 hole clerk key
	000 (off state)
	001 (Clerk 1)
	002 (Clerk 2)
	⁓
	255 (Clerk 255)
Key code:	--- (simultaneous two key) depression, invalid entry)

KEY POSITION CODE
ER-A460 (Normal key) 14 x 6

↑R	↑J	016	022	028	034	040	046	052	058	064	070	076	082
005	010	015	021	027	033	039	045	051	057	063	069	075	081
004	009	014	020	026	032	038	044	050	056	062	068	074	080
003	008	013	019	025	031	037	043	049	055	061	067	073	079
002	007	012	018	024	030	036	042	048	054	060	066	072	078
001	006	011	017	023	029	035	041	047	053	059	065	071	077

ER-A470 (Flat key) 15 x 8

↑R	↑J	022	030	038	046	054	062	070	078	086	094	102	110	118
007	014	021	029	037	045	053	061	069	077	085	093	101	109	117
006	013	020	028	036	044	052	060	068	076	084	092	100	108	116
005	012	019	027	035	043	051	059	067	075	083	091	099	107	115
004	011	018	026	034	042	050	058	066	074	082	090	098	106	114
003	010	017	025	033	041	049	057	065	073	081	089	097	105	113
002	009	016	024	032	040	048	056	064	072	080	088	096	104	112
001	008	015	023	031	039	047	055	063	071	079	087	095	103	111

④ Test termination
Change the MODE switch position other than SRV position to terminate the test. The test termination message is printed.

Test termination print	101

[3] R/J printer test

① Key operation
102 → [TL]

② Content

DOT DISPLAY: P R I N T S R V
7-SEGMENT DISPLAY: 1 2 3 4 5 6 7 8 9 0

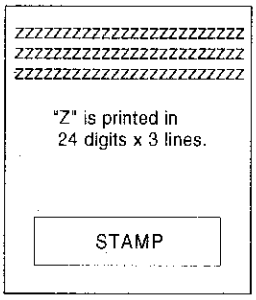

RECEIPT

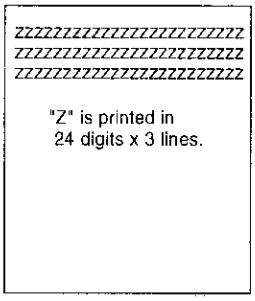

JOURNAL

③ Check content

1. Check that the slanted lines of "Z" characters are clearly printed.
2. Check that the characters are printed at a uniform density.
3. Check the paper feed operation and the logo print.

④ Termination
This check is terminated automatically.
The termination print is not performed.

[4] Keyboard test

① Key operation
XXXX104 → [TL]
XXXX: Sumcheck data

Standard key layout sumcheck data	
ER-A460	3681
ER-A470	7449

② Details of test
Keyboard check is performed with the sum check data of key code.
For sum check data, data are inputted to the upper four digits before the diagnostics code. The data are compared with the added data which are added until the final key (TL) is pressed. If the data agree with the added data, the end print is made. If not, the error print is made.

The sum check data is obtained by totalizing all key hardware codes except for the TL key and converting the total into a decimal figure.

ER-A460 KEY HARDWARE CODE

1. STANDARD KEY LAYOUT
SUM CHECK DATA = 6F+65+63+00+02+ ····· = E61 = 3681

↑R	↑J	6F		65		63		00	02	08	0C	0E
7E	7F	77		74	73	71		10	12	16	18	0D
5E	7D	5F		55	54	53		50	52	56	59	2B
4E	5D	4F		45	44	43		42	46	48	39	0B
4D	2F			25	24	23		26	28	09	1B	
3D	37			7B		78		3A	2A	2C	TL	

2. ALL KEY LAYOUT

↑R	↑J	6F	67	65	64	63	61	21	00	02	08	0C	0E
7E	7F	77	75	74	73	71	70	11	10	12	16	18	0D
5E	7D	5F	57	55	54	53	51	31	50	52	56	59	2B
4E	5D	4F	47	45	44	43	41	40	42	46	48	39	0B
4D	2D	2F	27	25	24	23	20	22	26	28	09	0A	1B
3D	3F	37	3E	1E	7B	78	79	1A	3A	2A	2C	1C	1D

ER-A470 KEY HARDWARE CODE

1. SUM CHECK DATA = 0F+06+05+04+00+····· = 1D0E = 7449

↑R	↑J	0F	06	05	04	00	01	07	0B	0A	09	08	0C	0D
4F	46	45	44	40	41	42	43	47	4B	4A	49	48	4C	4D
3F	36	35	34	30	31	32	33	37	3B	3A	39	38	3C	3D
2F	26	25	24	20	21	22	23	27	2B	2A	29	28	2C	2D
1F	16	15	14	10	11	12	13	17	1B	1A	19	18	1C	1D
5F	56	55	54	50	51	52	53	57	5B	5A	59	58	5C	5D
6F	66	65	64	60	61	62	63	67	6B	6A	69	68	6C	6D
7F	76	75	74	70	71	TL	73	77	7B	7A	79	78	7C	7A

2. ALL KEY LAYOUT

↑R	↑J	0F	06	05	04	00	01	07	0B	0A	09	08	0C	0D
4F	46	45	44	40	41	42	43	47	4B	4A	49	48	4C	4D
3F	36	35	34	30	31	32	33	37	3B	3A	39	38	3C	3D
2F	26	25	24	20	21	22	23	27	2B	2A	29	28	2C	2D
1F	16	15	14	10	11	12	13	17	1B	1A	19	18	1C	1D
5F	56	55	54	50	51	52	53	57	5B	5A	59	58	5C	5D
6F	66	65	64	60	61	62	63	67	6B	6A	69	68	6C	6D
7F	76	75	74	70	71	72	73	77	7B	7A	79	78	7C	7D

DOT DISPLAY: K E Y T E S T S R V
7-SEGMENT DISPLAY: ○ ○ ○
Key code

③ Check item

A) Check the display in the test and the content of end print.

④ Test end

Normal end	104
Error	E - - - 104

[5] Mode switch test

① Key operation
105 → [TL]

② Details of test

DOT DISPLAY: M O D E S W S R V
7-SEGMENT DISPLAY: X

MODE: SRV_PGM1/2_TEXT_∞_OP X/Z_REG_X1/Z1_X2/Z2___SRV

x:	0	1	2	(E)	3	4	5	7	0

"x" must be read in proper sequence.

③ Check item

A) Check of the display in the test and the content of end print.

④ Test end

Normal end	105
Error	E - - - 105

[6] Printer sensor test

① Key operation
106 → [TL]

② Details of test
Check the state of the paper near end sensor and the validation sensor.

DOT DISPLAY: S E N S O R S R V
7-SEGMENT DISPLAY: x x y y

③ Check item

x, x: Near end, receipt side, journal side
y, y: Validation, receipt side, journal side
C: Paper present
O: Paper empty
"C" is displayed also when there are no sensors.

④ Test end
Press any key to terminate the test. The end print is as follows:
106

[7] Calendar oscillator test

① Key operation
108 → [TL]
Functional description
This program is used to test the calendar oscillator function.

DOT DISPLAY: T I M E R S R V
7-SEGMENT DISPLAY: ✳ ✳ – ✳ ✳

" ✳ ✳ – ✳ ✳ " shows the current time.

② Check the following items:
i) Testing blinking "–". (500ms ON and OFF)

③ Test termination
Any key depression terminates the test with the termination print.

Test termination print	108

[8] SSP test

① Key operation
109 → [TL]

② Functional description
If an SSP is programmed, its contents are automatically checked and the result is printed.

DOT DISPLAY: S S P T E S T S R V
7-SEGMENT DISPLAY: 1 2 3 4 5 6 7 8 9 0

③ Check the following items:
Check printing of the termination message.

④ Test termination
The test terminates automatically after printing the termination print.

109	E----- 109	F----- 109
Normal end print	Error print	SSP table full print (NOTE)

Note: In this SSP check, set the data for check in the empty area of SSP entry REG and erase the data for check after completion of check. Therefore, SSP setting before check is not cleared. If, therefore, there is no SSP entry REG remained for SSP check, F-print (SSP entry register full print) is performed to terminate the program without check.

[9] Drawer open sensor test

① Key operation
110~111 → [TL]

② Functional description
The drawer indicated by the job number is opened to check the proper action.
Drawer opened: O indicated
Drawer closed: C indicated
110: Drawer-1: Standard drawer
111: Drawer-2: Remote drawer

DOT DISPLAY: D R A W E R Y S R V
7-SEGMENT DISPLAY: X

X: O= Drawer opened
C= Drawer closed
Y: 1 or 2

③ Check the following items:
a) Check opening of the specified drawer.
b) Check the display indication when the drawer is open and closed.

④ Any key depression terminates the test with the termination print.

Test termination print	11X

X: 0~1

[10] Display test-2

① Key operation
116 → [TL]

② Functional description
The display CGs in CKDC6 are checked. The 256 CGs are grouped into 32 blocks and each 8 characters is displayed on the dot display.
The check start with CG code 00H - 07H, and the following blocks are sequentially displayed when any key is pressed.

DOT DISPLAY: ABCDEFGH S R V
7-SEGMENT DISPLAY: 1 2 3 4 5 6 7 8 9 0

O: CG display position

③ Check the following items.
1. Check that the display is normal.
2. Check that there is no blur, defects, and unevenness.

④ Test termination
To terminate the test, set the mode key to any mode other than SRV mode.

Test termination print	116

[11] I/R interface test

For I/R communication test, A460 or A470 is used as the checker.

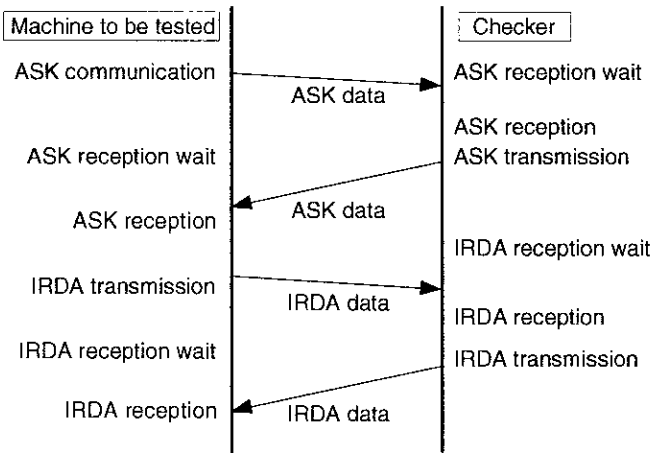

① Key operation
Perform key operation of 117 → [TL] to set the checker side to the reception wait state.
On the machine to be tested, perform the following key operation.
118 → [TL]

② Details of test

1) Machine to be tested
The following data are transmitted in the ASK format.

Transmission data (9600BPS) 00,11,22,33,44,55,66,77,88, 99,AA,BB,CC,DD,EE,FF

DOT DISPLAY: I / R S E N D S R V
7-SEGMENT DISPLAY:

1') Checker

DOT DISPLAY: I / R R C E V S R V
7-SEGMENT DISPLAY:

After receiving the data, they are transmitted in the ASK format.

DOT DISPLAY: I / R S E N D S R V
7-SEGMENT DISPLAY:

2) Machine to be tested

DOT DISPLAY: I / R R C E V S R V
7-SEGMENT DISPLAY:

If received data are the same as the transmitted data, it is normal.

Normal reception print	ASK	OK
Abnormal reception print	ASK	NG

After completion of printing, the following data are sent in the IRDA format.

Transmission data (9600BPS) 00,11,22,33,44,55,66,77,88, 99,AA,BB,CC,DD,EE,FF

DOT DISPLAY: I / R S E N D S R V
7-SEGMENT DISPLAY:

2') Checker

DOT DISPLAY: I / R R C E V S R V
7-SEGMENT DISPLAY:

After receiving the data, they are sent in the IRDA format.

DOT DISPLAY: I / R S E N D S R V
7-SEGMENT DISPLAY:

3) Machine to be tested

DOT DISPLAY: I / R R C E V S R V
7-SEGMENT DISPLAY:

If received data are the same as the transmitted data, it is normal.

Normal reception print	IRDA	OK
Abnormal reception print	IRDA	NG

③ Check item
Check the print contents (both ASK OK and IRDA OK).

④ Test end
The end print is made and the test is automatically terminated.

[12] Standard RAM test

① Key operation
120 → TL

② Functional description
Perform the following check for the standard RAM 32 KByte SRAM. The memory contents should not be changed before and after the check.

Perform the following processes for memory address to be checked (1C0000H~1DFFFFH).
PASS1: Save memory data.

PASS2: Write data "0000H."
PASS3: Read and compare data "00H," write data "55H."
PASS4: Read and compare data "55H," write data "AAH."
PASS5: Read and compare data "AAH."
PASS6: Restore the memory data.

If a compare error occurs in the check sequence PASS1-PASS6, an error print is made. If no error occurs through all address, the check ends normally.

The following address check is performed further.
Check point address = 1C0000H, 1C0001H
1C0002H, 1C0004H
1C0008H, 1C0010H
1C0020H, 1C0040H
1C0080H, 1C0100H
1C0200H, 1C0400H
1C0800H, 1C1000H
1C2000H, 1C4000H
1C8000H, 1D0000H

DOT DISPLAY: S – R A M T S S R V

7-SEGMENT DISPLAY:

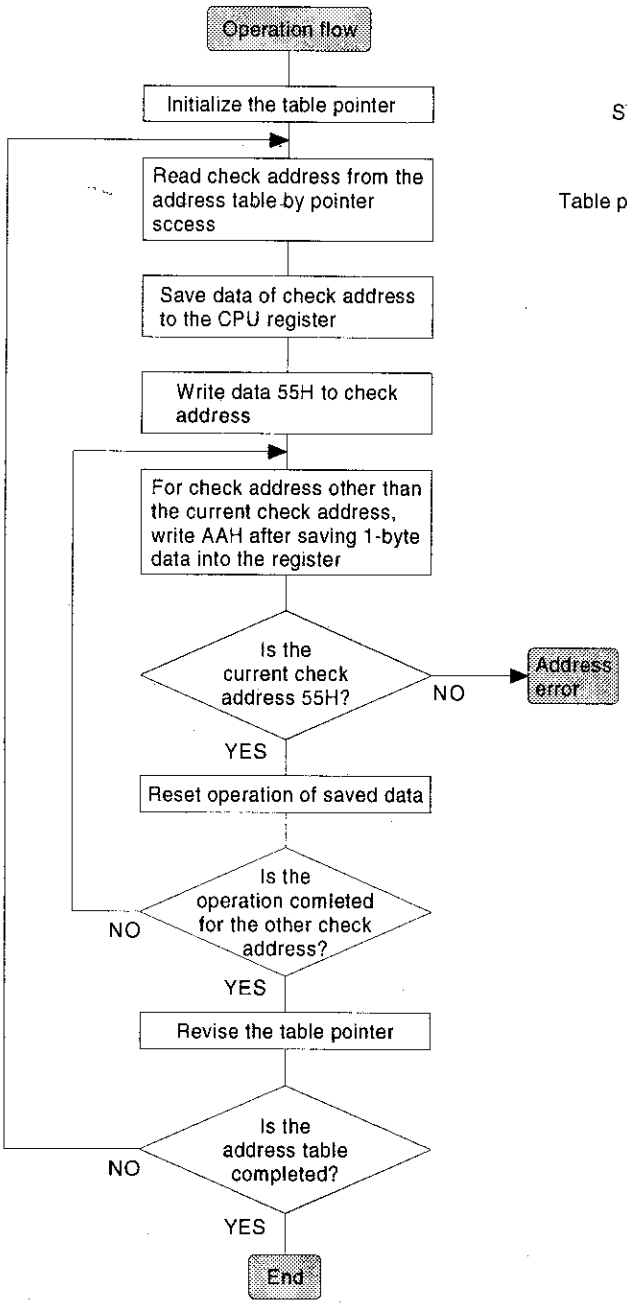

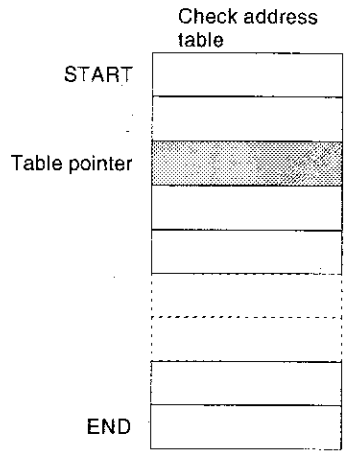

③ Check the following items:
Check the termination printout.

④ Test termination
The test terminates after printing the termination printout.
Termination printout:

Normal termination		120
Abnormal termination	Ex - - - - -	120
		※※※※※

X = 01: Data check error
02: Address check error

Note: When an error occurs, the error print is performed and the check is terminated. The error occurrence address is shown in hexadecimal at positions shown with ※※※※※.

[13] Standard ROM test

① Key operation
130 → [TL]

② Functional description
Sum check of the standard ROM (C00000H - C3FFFFH) is performed. If the lower two digits of SUM is 10H, it is normal.

DOT DISPLAY: S – R O M T S S R V

7-SEGMENT DISPLAY:

③ Check the following items:
Check the printout after the test.

④ Test termination
The test automatically terminates with termination message.

Normal termination print		130
	ROM	27020※※※※※
		※※※※※
Error termination print	E - - - -	130
	ROM	27020※※※※※
		※※※※※

Note: "※※※※※" means the ROM version number.
The underlined section (10 bytes) of code table is provided in the ROM as a standard and the table content is always printed.
The table position is the upper 10 digits of the ROM address.
The check sum correction address is the last address -0FH.

Note: In the case of the ER-ROM, the ROM version number is displayed in the upper and the lower stages.
In the case of the MASK-ROM (future specification), the MASK ROM code is displayed in the upper stage, and the ROM version number is displayed in the lower stage.

	130
ROM	27020RAU1A
	RAU1A
	400

[14] R/J printer dot pulse width adjustment

The dot pulse width adjust circuit is provided to control the width of the current applied to the dot head of the printer, according to a supply voltage fluctuation.
When the circuit is changed with a new one for such as a repair work, the dot pulse width needs to be adjusted using the 200K pot VR1.

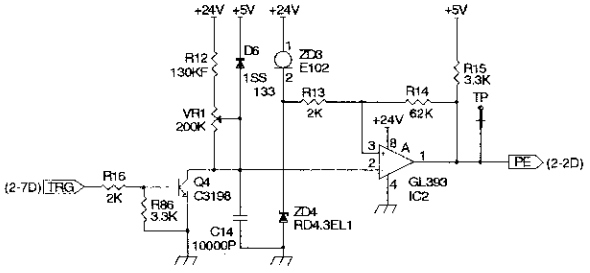

Fig. 3-3

Dot pulse adjusting method

1. Turn power on.
2. Measure the voltage of the VP line between the fuse F1 and GND. Use a digital voltmeter capable of measuring 100mV steps.
3. Set the MODE switch to the SRV position and start the diagnostic program Job #150 with the next command procedure.
   150 → [TL]
4. Adjust pulse width of PE at the test point TP1 as shown in the graph in Fig.3. The pulse width of PE can be adjusted using the 200K pot VR1.
5. To terminate the diagnostic program, press any key.

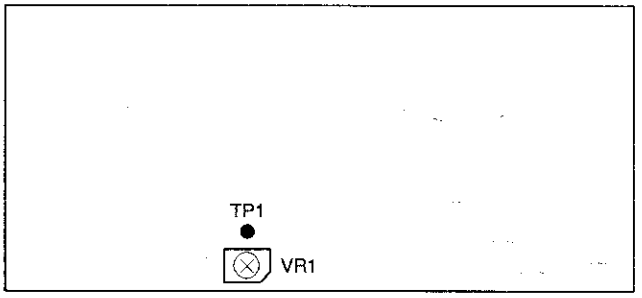

Fig. 3-4

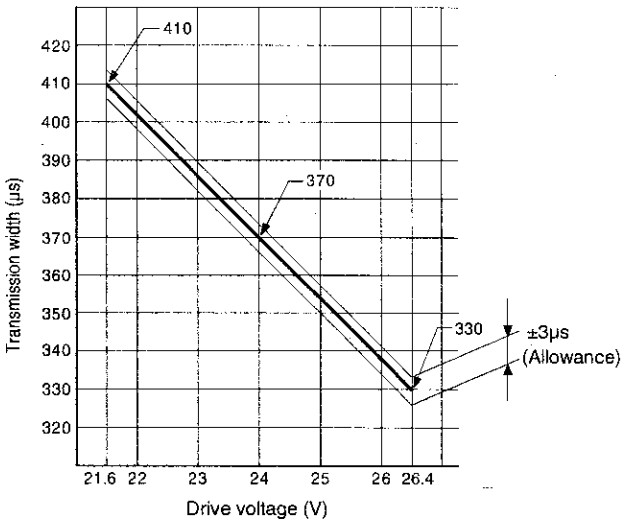

Fig. 3-5

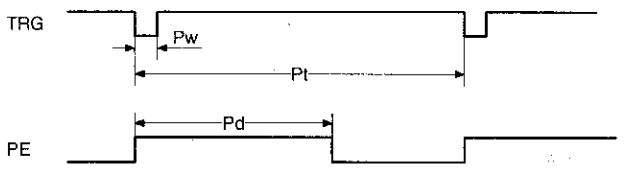

Pw ≒ 4μsec
Pt ≧ 1000μsec
Pd is adjusted to 373±3μsec. when Vp is +24.0V.

Fig. 3-6

[15] Option RAM test

① Key operation
200 → TL

JOB #NO.	RAM NO.	Memory to be checked	Address area to be checked
200	Option RAM (main)	ER-02RA	1E0000H ~ 1FFFFFH
		ER-01RA	1E0000H ~ 1E4FFFH

② Content
The following check are performed for the optional RAM.
The following process is performed for memory addresses to be checked.

PASS1: memory data save
PASS2: Data "00H" write
PASS3: Data "00H" read and comparison, data "55H" write
PASS4: Data "55H" read and comparison, data "AAH" write
PASS5: Data "AAH" read and comparison
PASS6: Memory data restore

If a compare error is found in the check sequence from PASS1 to PASS6, error print (error code E1) is performed. If there is no error found to the end of the last address, the operation is completed normally.

Address to be checked
1E0000H, 1E0001H
1E0002H, 1E0004H
1E0008H, 1E0010H
1E0020H, 1E0040H
1E0080H, 1E0100H
1E0200H, 1E0400H
1E0800H, 1E1000H
1E2000H, 1E4000H
1E8000H, 1F0000H → (For ER-02RA)

DOT DISPLAY: O – R A M T S S R V
7-SEGMENT DISPLAY:

③ Check the following items.
Check the termination print.

④ Test termination
The test terminates after printing the termination printout.

Termination print

E01---01RA	200	(ER-01RA data check error)
E02---01RA	200	(ER-01RA address check error)
E01---02RA	200	(ER-02RA data check error)
E02---02RA	200	(ER-02RA address check error)
01RA	200	(ER-01RA normal end)
02RA	200	(ER-02RA normal end)

[16] Option ROM test

① Key operation:
400 → TL

② Functional description:
A sum check is done for the option ROM (Address hex C80000H thru C9FFFFH.)

DOT DISPLAY: O – R O M T S S R V
7-SEGMENT DISPLAY:

③ Check the following items:
Check the termination printout.

④ Test termination:
The test terminates after printing the termination printout.
Termination printout

Normal termination

	400
ROM	27010※※※※※
	※※※※※
E-----	400
ROM	27010※※※※※
	※※※※※

The underlined section must be the same as the standard ROM test specification. (Refer to JOB #130.)

	400
ROM	27010RAO1A
	RAO1A

CHAPTER 6. DOWNLOAD FUNCTION

1. General

RAM data can be transmitted in the following two methods.
Save the data before servicing as follows:

① ECR ↔ ECR

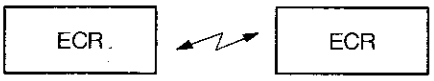

② ECR ↔ ER-02FD

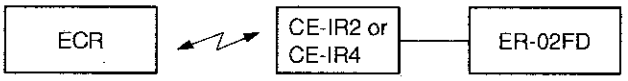

Note: The ONL lamp on the display blinks during IR transmission. If the ONL lamp goes off during transmission, it shows that transmission is interrupted by a shift in the optical axis and retrying process is being performed. To resume transmission, adjust the optical axis. If the ON lamp blinks, transmission is resumed.

2. Communication between ECRs

1) The pop-up display of the ER-A460/A470 is equipped with the IR interface. Set the distance between IR interfaces within 75cm. Communication between ECRs is available in the ASK system and in the IRDA system.

   Note: Set the memory size (JOB #971) and the transmission baud rate (JOB #903) in the receive side and the send side identically.

   • ECR to ECR

   O: EnableX: Disable

Baud rate (bps)	ASK	IrDA
2400	O	O
4800	O	O
9600	O	O
19200	O	O
38400	O	O
57600	O	O
115200	X	O

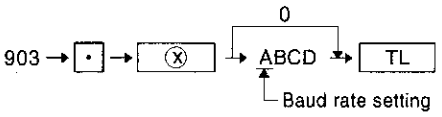

1. Baud rate (bps)	903-A
2400	2
4800	3
9600	4 ★
19200	5
38400	6
57600	7
115200	8

2) Communication sequence

   ① Set the receiving ECR ready to receive.

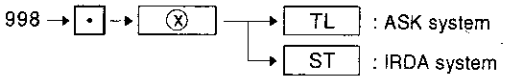

   ② Set the sending ECR.

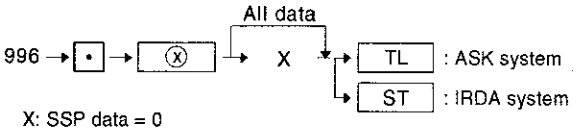

3) Transmission status.
   Description of error status
   1: Application error (Command error)
   2: Line error (DTR OFF)
   3: Application error (Parity error)
   4: Application error (Check sum error)
   5: Application error (Data size error)
   6: Hard ware error
   7: Power off error
   10: Time out error
   11: Application error (Transmit data size error)
   12: Application error (Block sequence error)
   13: Memory full error

4) Service reset the receiving ECR.

3. Communication between an ECR and the ER-01FD/02FD

1) The ER-A460/A470 can perform IR communication by connecting the IR interface (CE-IR2/IR4) to the FD unit (ER-01FD/02FD). The transmission is made only in the ASK system.

2) ER-01FD/02FD ROM replacement
   To perform IR communication with the ER-01FD or the ER-02FD, the control ROM must be replaced.

   New control ROM version for IR communication

	Version No.	Parts code
ER-01FD	R261C	VHI27256R261C
ER-02FD	RAG1D	VHI27256RAG1D

3) Connection between the ER-01FD/02FD and the CE-IR2/IR4
   Make the connection cable and connect the FD unit and the IR interface.

   Connection cable wiring

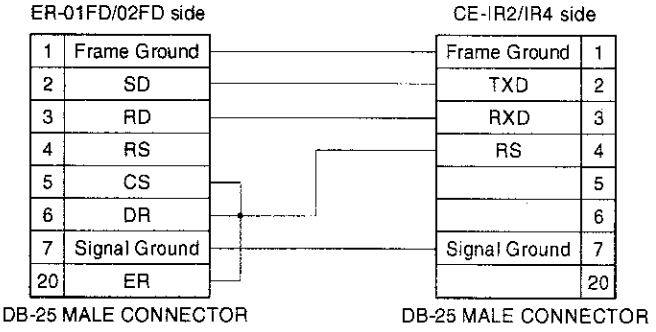

4) DIP switch setting of the ER-01FD/02FD

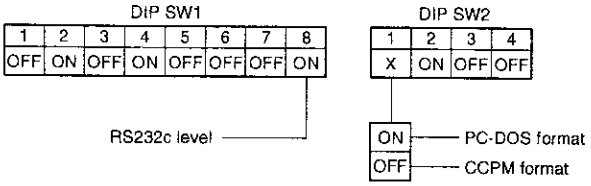

Note: When performing IR communication with the ER-A460/A470, the baud rate should be set to 19200 bps only.
The PC-DOS format cannot be used for the ER-01FD.

5) CE-IR2/IR4 setting

① CE-IR2
The CE-IR2 is used in the ASK mode only, and requires no setting.

② CE-IR4
When the power switch of CE-IR4 is turned on, the mode is set to the ASK mode. The ASK mode is retained until the power switch is turned off.

6) Saving data

① Turn on the power switch and insert a floppy disk which has been formatted.

② Start the SEND JOB on the ECR side as follows:

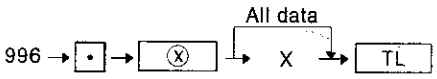

X: 0 = SSP

③ Data transmission is started and the green lamp on the ER-02FD blinks.

7) Loading data

① Turn on the power switch and insert the floppy disk which stores the data.

② Start the RECEIVE JOB on the ECR side as follows:

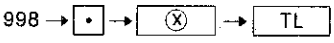

③ Press the [SEND] key on the FD unit.

④ Data transmission is started and the Green lamp on the ER-02FD blinks.

⑤ Service reset the ECR.

1. Main PWB circuit diagram

CPU (HD6415108)

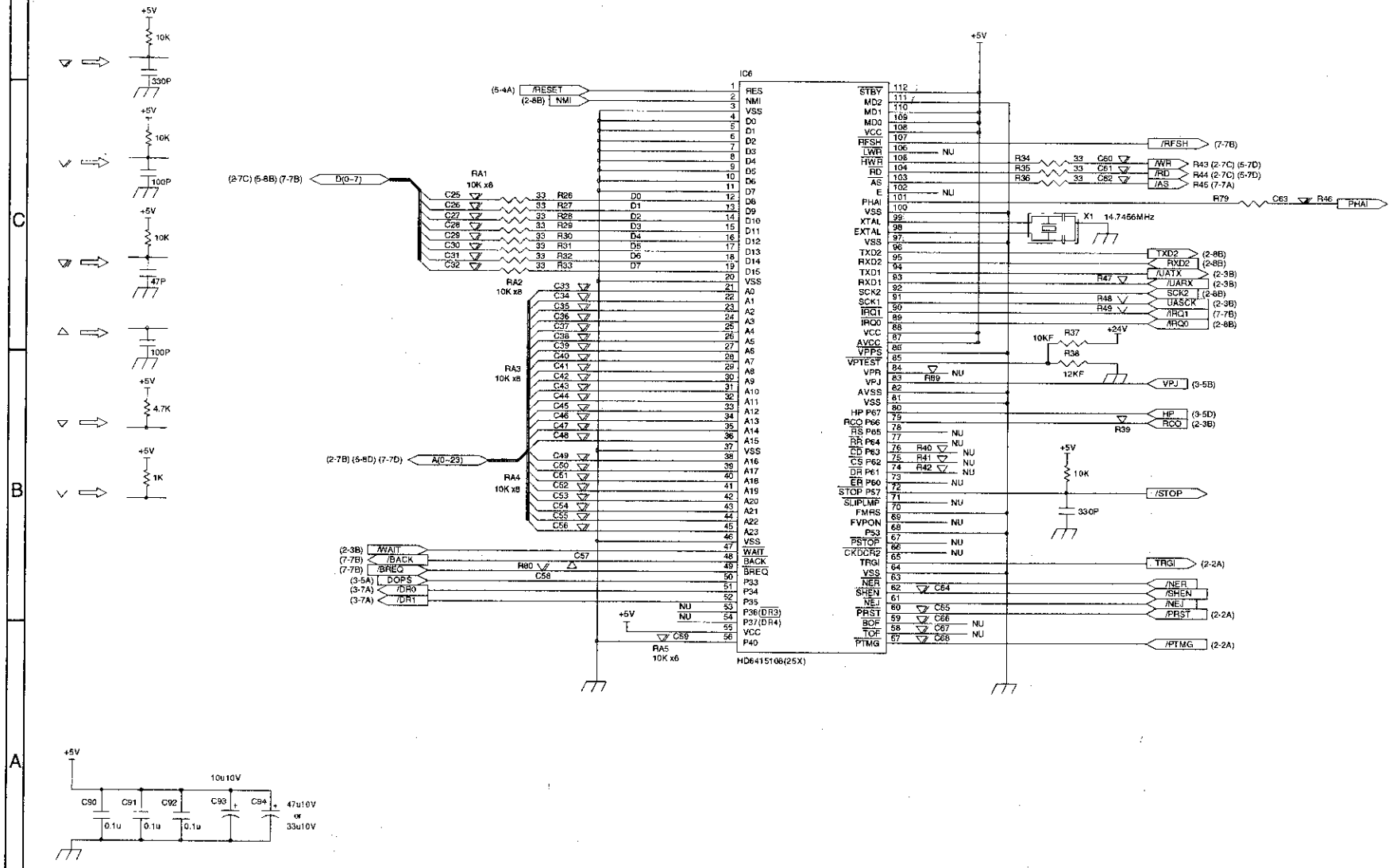

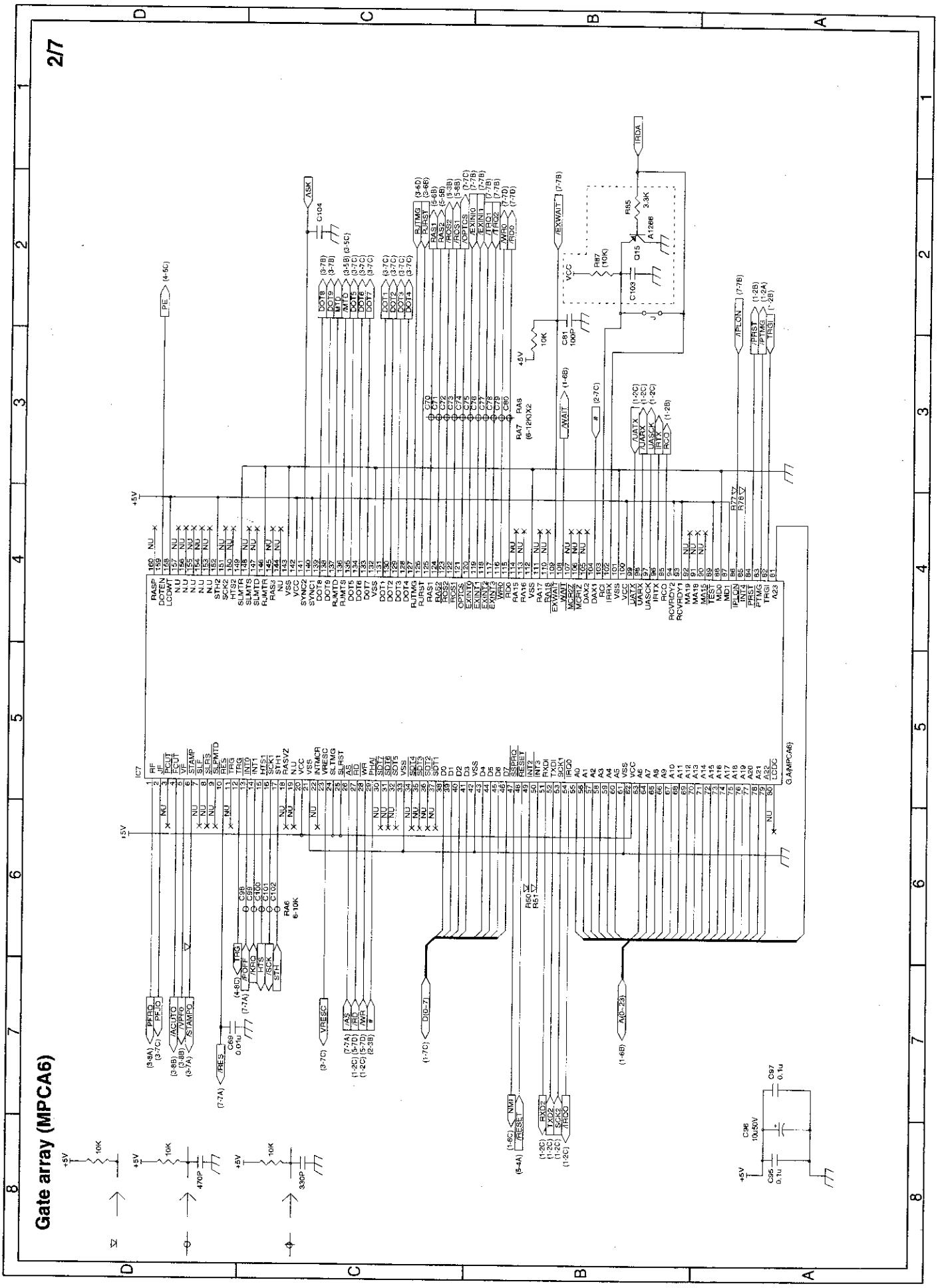
2/7
Gate array (MPCA6)
IC7
G A(MPCA6)
+5V
10K
470P
330P
C69 0.01u
C96 10u/50V
C56 0.1u
C97 0.1u
C104
C103
C81 100P
R87 (10K)
R65 3.3K
Q15
A1266
IRDA
ASK
PE
PFRQ
PF_IO
/ACUTO
/VPPO
/STAMPO
/RES
VRESC
/AS
/DT
/WR
/RD
/PHAI
D(0-7)
A(0-23)
/NMI
/RESET
/RXD2
/TXD2
/SCK2
/IRQ0
/RXDI
/TXDI
/SCK1
/IRQ0
/EXWAIT
/AWAIT
/UATX
/UARX
UASCK
IRTX
RCO
/IPLON
/PRST
/PTMG
TRGI
/TRG
/HTS
/SCK
/STH
RA6 6-10K
RA7 RA8 (6-12K)X2
R77
R78
R50
R51

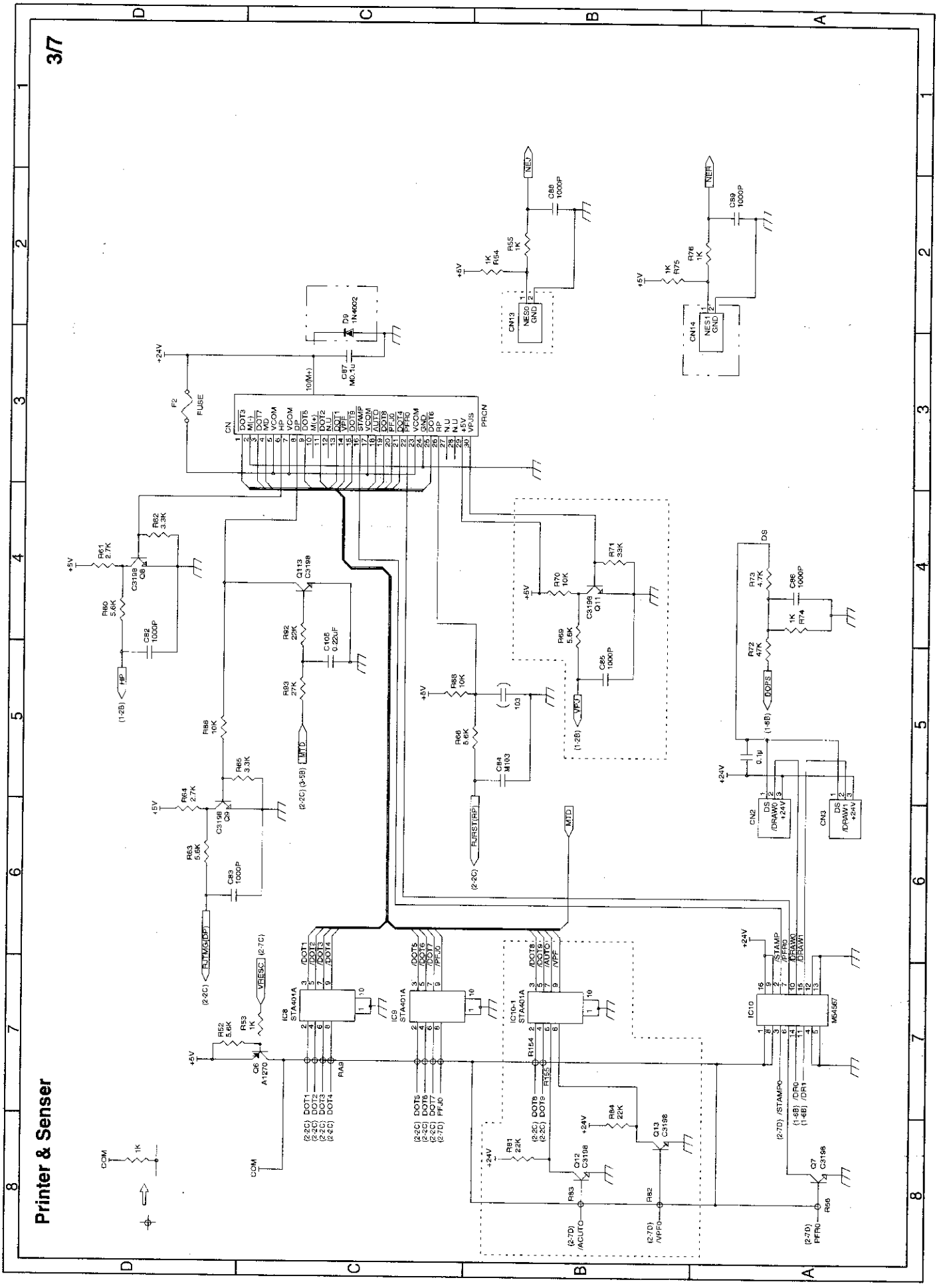
3/7
Printer & Senser
CN
PRCN
IC8 STA401A
IC9 STA401A
IC10-1 STA401A
IC10 M54567
CN13 NES0 GND
CN14 NES1 GND
CN2 DS /DRAW0 +24V
CN3 DS /DRAW1 +24V
DS
FUSE
D9 1N4002
C87 M0.1u
C88 1000P
C89 1000P
C86 1000P
C85 1000P
C84 M103
C83 1000P
C82 1000P
C105 0.22uF
Q6 A1270
Q7 C3198
Q9 C3198
Q11 C3198
Q12 C3198
Q13 C3198
Q113 C3198
R51 5.6K
R52 5.6K
R53 1K
R54 1K
R55 1K
R56
R60 5.6K
R61 2.7K
R62 3.3K
R63 5.6K
R64 2.7K
R65 3.3K
R66 5.6K
R68 10K
R69 5.6K
R70 10K
R71 33K
R72 47K
R73 4.7K
R74 1K
R75 1K
R76 1K
R81 22K
R82 22K
R83 27K
R84 22K
R88 10K
R154
R155
RJTMS(DP)
RJRST(RP)
VRESC
MTD
NEJ
NER
DOPS
VPFJ
HP
COM
+5V
+24V

P-OFF, Dot pulse

<DOT PULSE ADJ.>

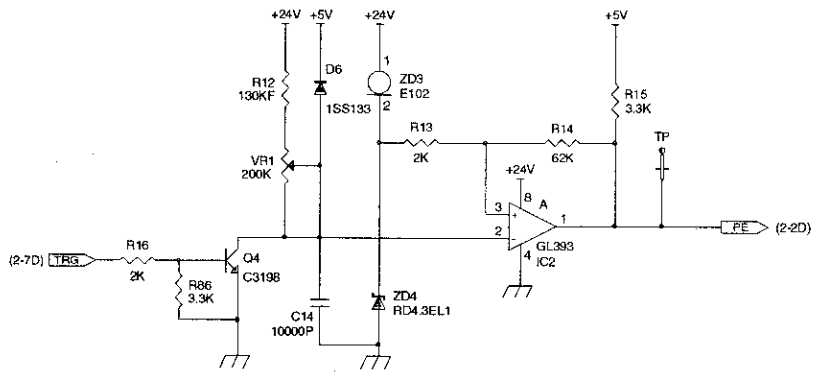

<P-OFF CIRCUIT>

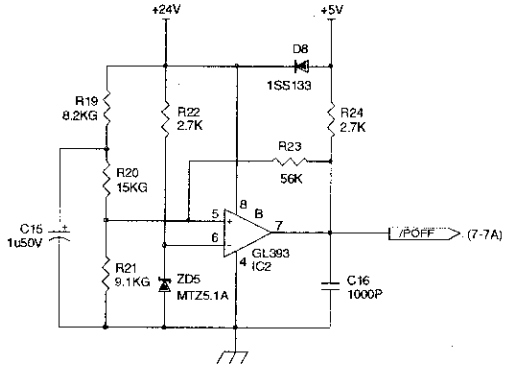

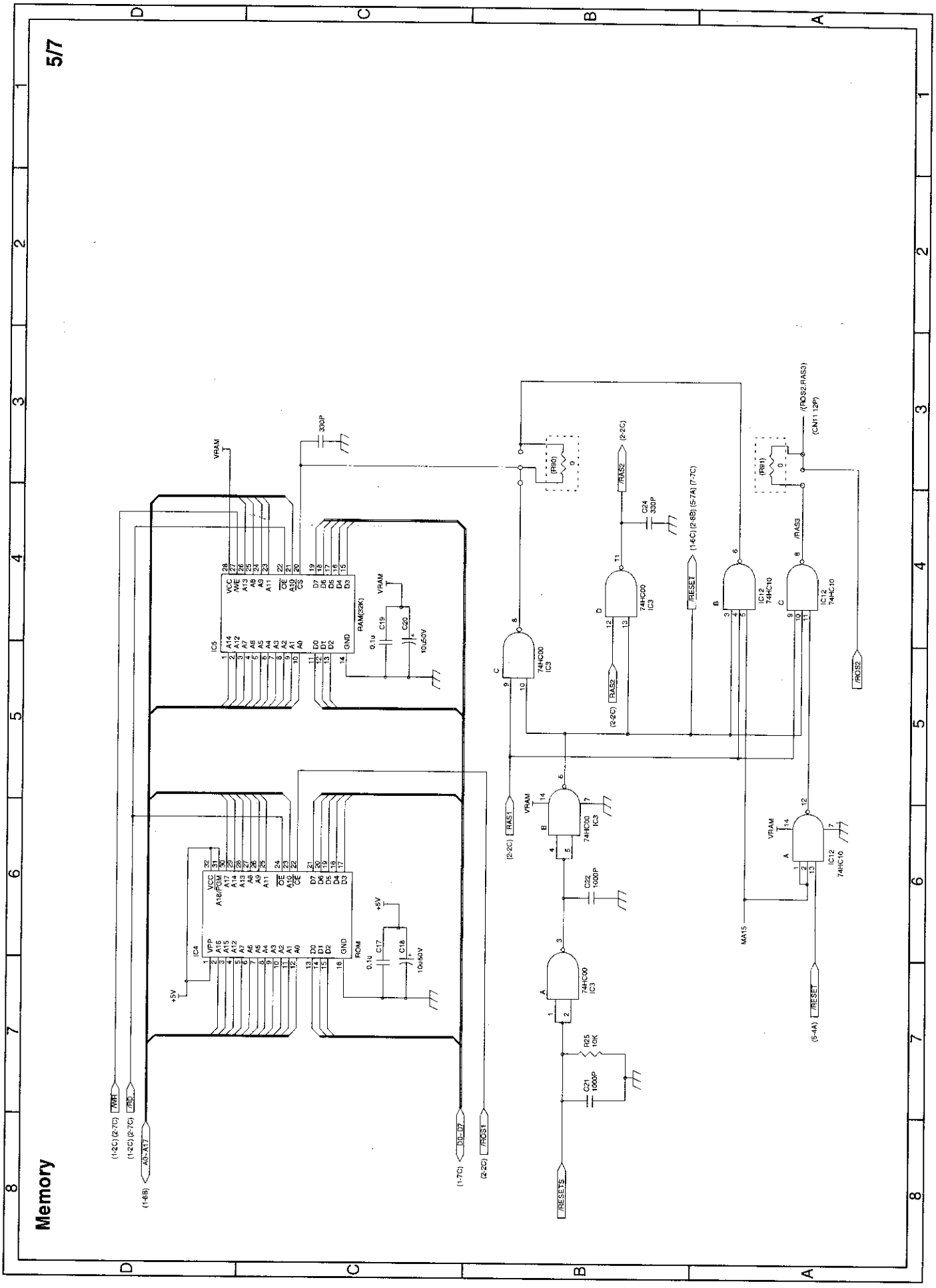
Memory
5/7
IC5
RAM(32K)
IC4
ROM
74HC00
IC3
IC12
74HC10
VRAM
+5V
330P
C19
C20
C17
C18
C21
1000P
C22
1000P
C24
330P
R25
10K
/RAS1
/RAS2
/RAS3
/RESET
/RESETS
/ROS1
/ROS2
/ROS2,RAS3)
(CN11 12P)
MA15
A0~A17
D0~D7
/WR
/RD
(1-2C) (2-7C)
(1-6B)
(1-7C)
(2-2C)
(1-6C) (2-8B) (5-7A) (7-7C)
(5-4A)

Power supply

6/7

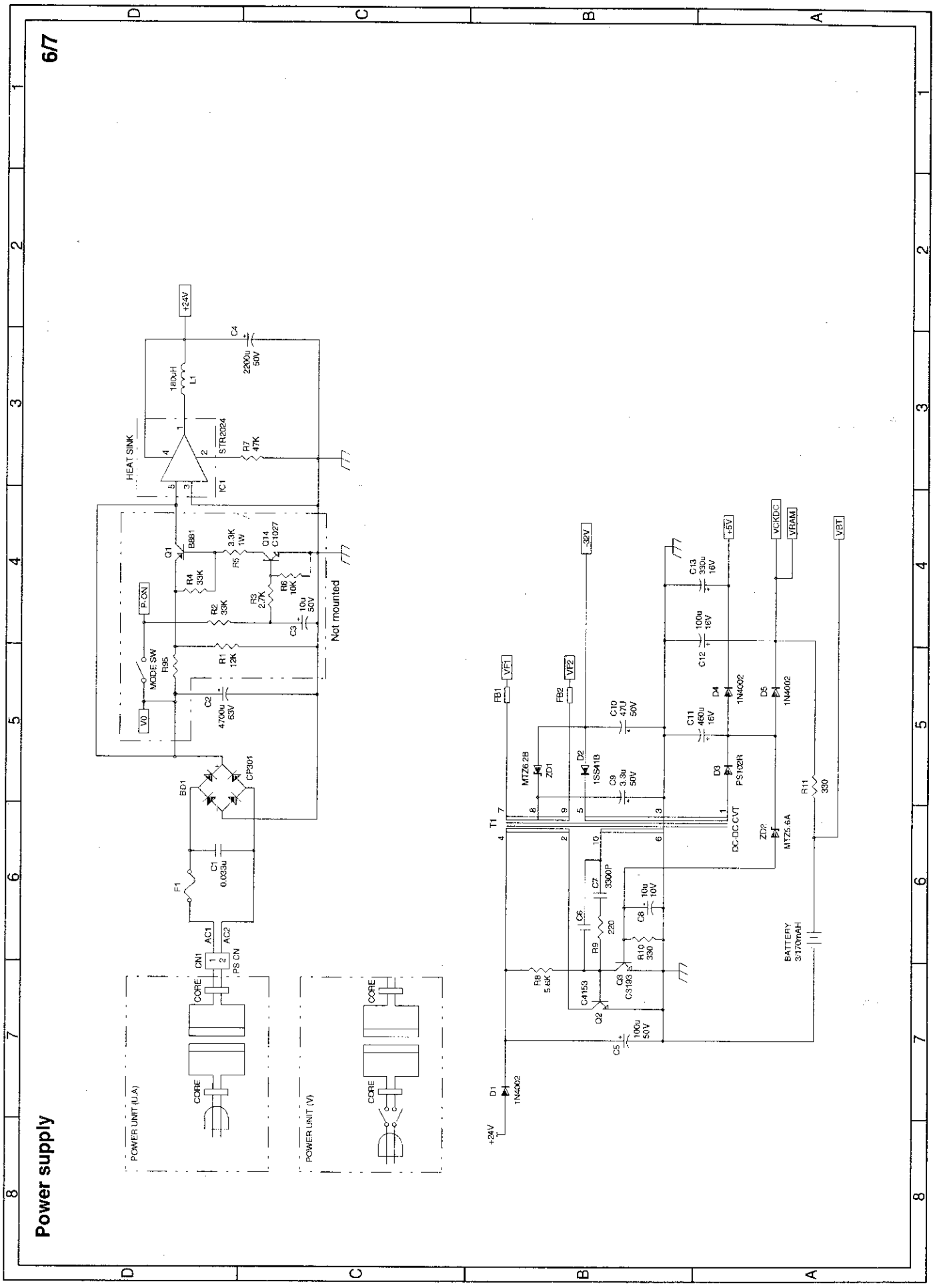

Main PWB connector

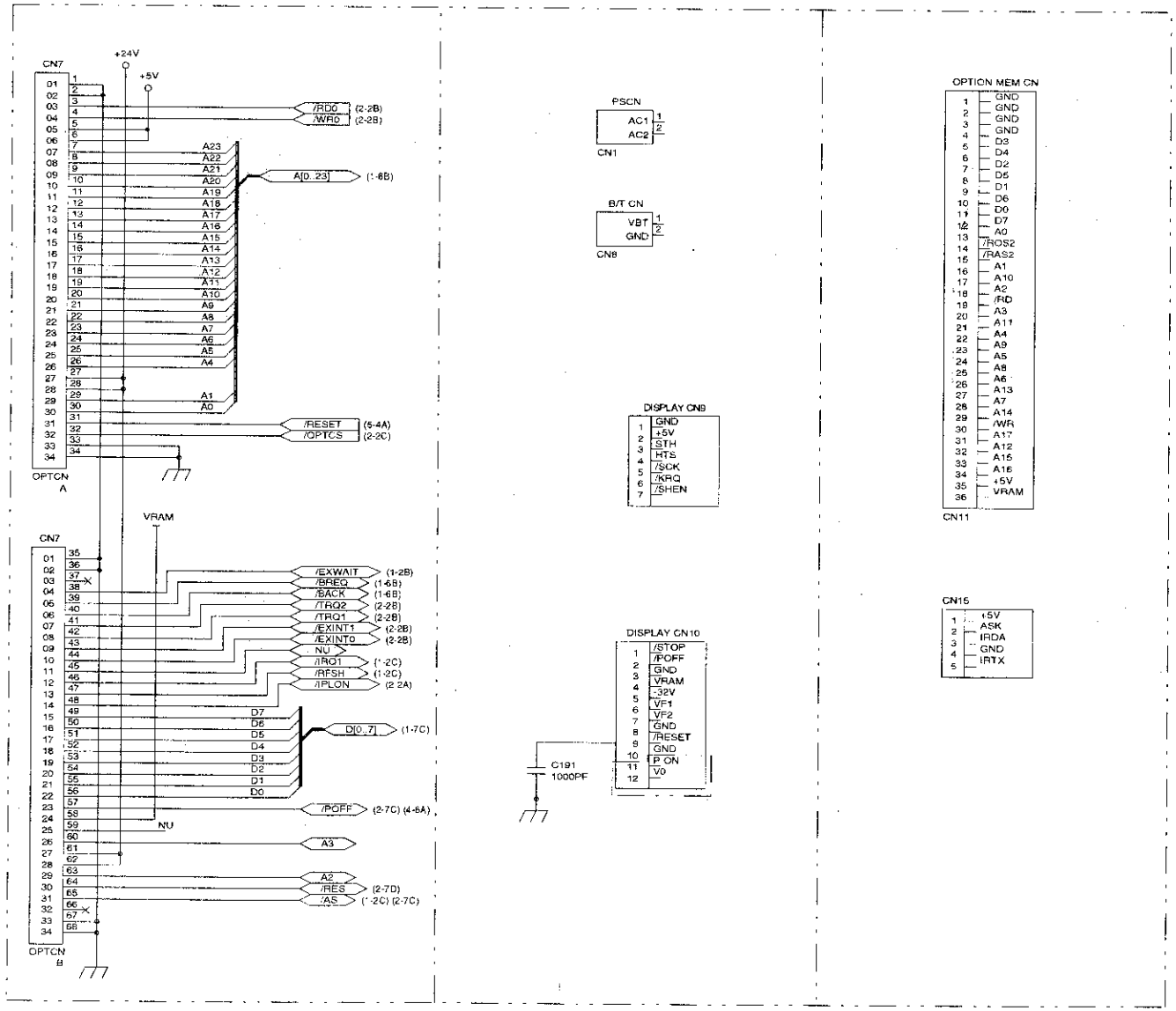

2. Main PWB layout

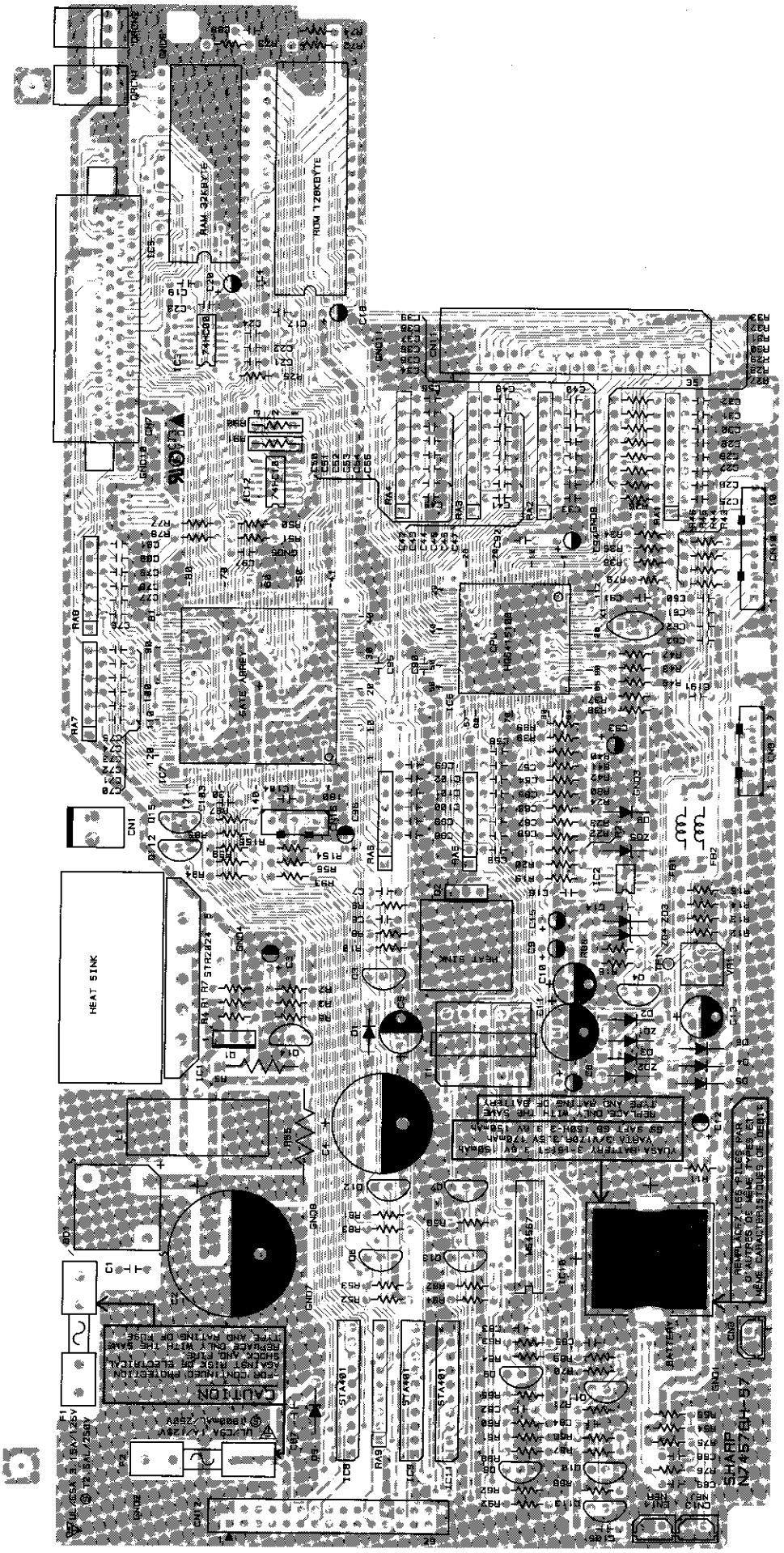

3. Display PWB circuit diagram

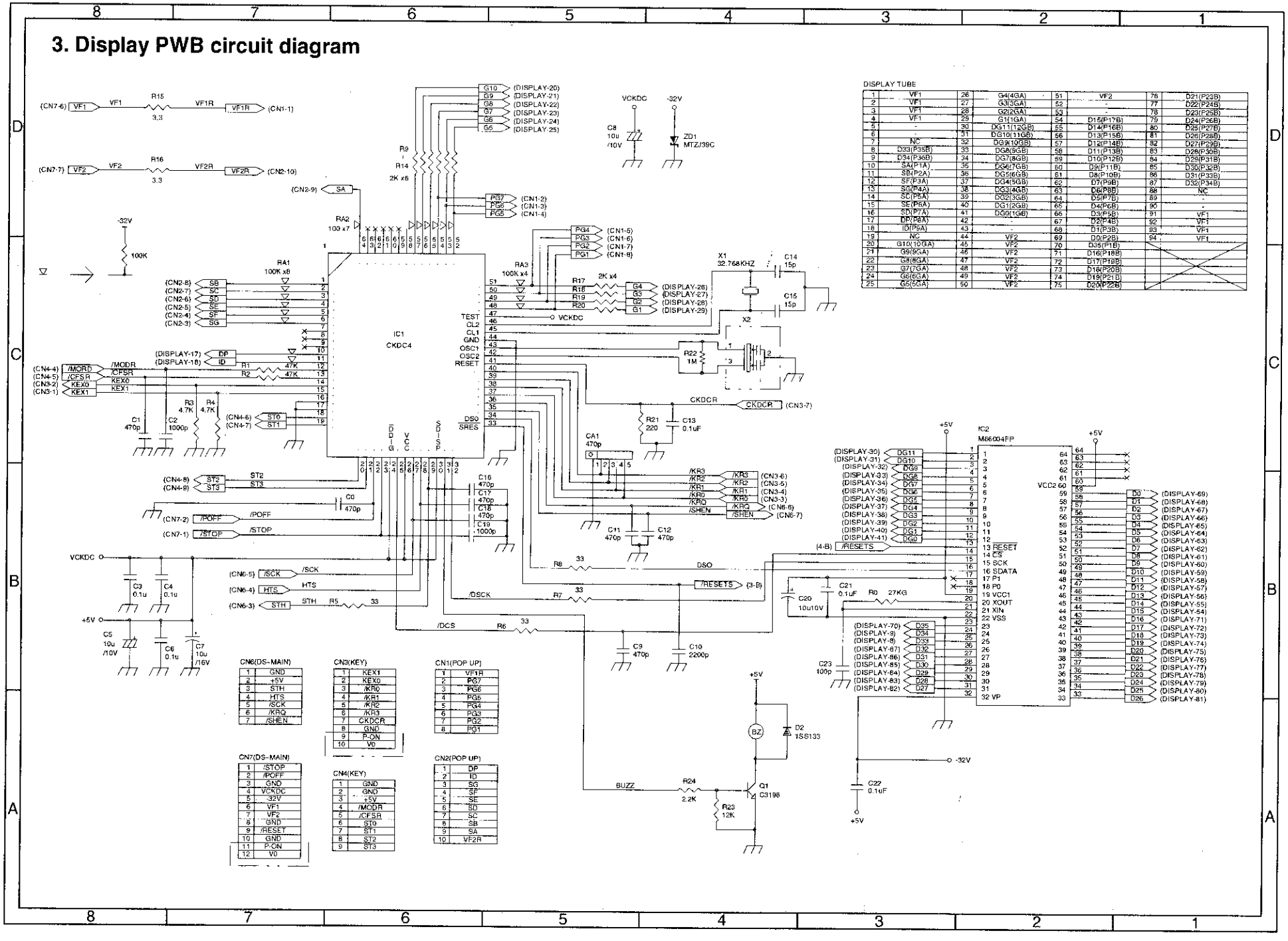

DISPLAY TUBE

1	VF1	26	G4(4GA)	51	VF2	76	D21(P23B)
2	VF1	27	G3(3GA)	52	-	77	D22(P24B)
3	VF1	28	G2(2GA)	53	-	78	D23(P25B)
4	VF1	29	G1(1GA)	54	D15(P17B)	79	D24(P26B)
5	-	30	DG11(12GB)	55	D14(P16B)	80	D25(P27B)
6	-	31	DG10(11GB)	56	D13(P15B)	81	D26(P28B)
7	NC	32	DG9(10GB)	57	D12(P14B)	82	D27(P29B)
8	D33(P35B)	33	DG8(9GB)	58	D11(P13B)	83	D28(P30B)
9	D34(P36B)	34	DG7(8GB)	59	D10(P12B)	84	D29(P31B)
10	SA(P1A)	35	DG6(7GB)	60	D9(P11B)	85	D30(P32B)
11	SB(P2A)	36	DG5(6GB)	61	D8(P10B)	86	D31(P33B)
12	SF(P3A)	37	DG4(5GB)	62	D7(P9B)	87	D32(P34B)
13	SG(P4A)	38	DG3(4GB)	63	D6(P8B)	88	NC
14	SC(P5A)	39	DG2(3GB)	64	D5(P7B)	89	-
15	SE(P6A)	40	DG1(2GB)	65	D4(P6B)	90	-
16	SD(P7A)	41	DG0(1GB)	66	D3(P5B)	91	VF1
17	DP(P8A)	42	-	67	D2(P4B)	92	VF1
18	ID(P9A)	43	-	68	D1(P3B)	93	VF1
19	NC	44	VF2	69	D0(P2B)	94	VF1
20	G10(10GA)	45	VF2	70	D35(P1B)		
21	G9(9GA)	46	VF2	71	D16(P18B)		
22	G8(8GA)	47	VF2	72	D17(P19B)		
23	G7(7GA)	48	VF2	73	D18(P20B)		
24	G6(6GA)	49	VF2	74	D19(P21B)		
25	G5(5GA)	50	VF2	75	D20(P22B)		

4. Display PWB layout

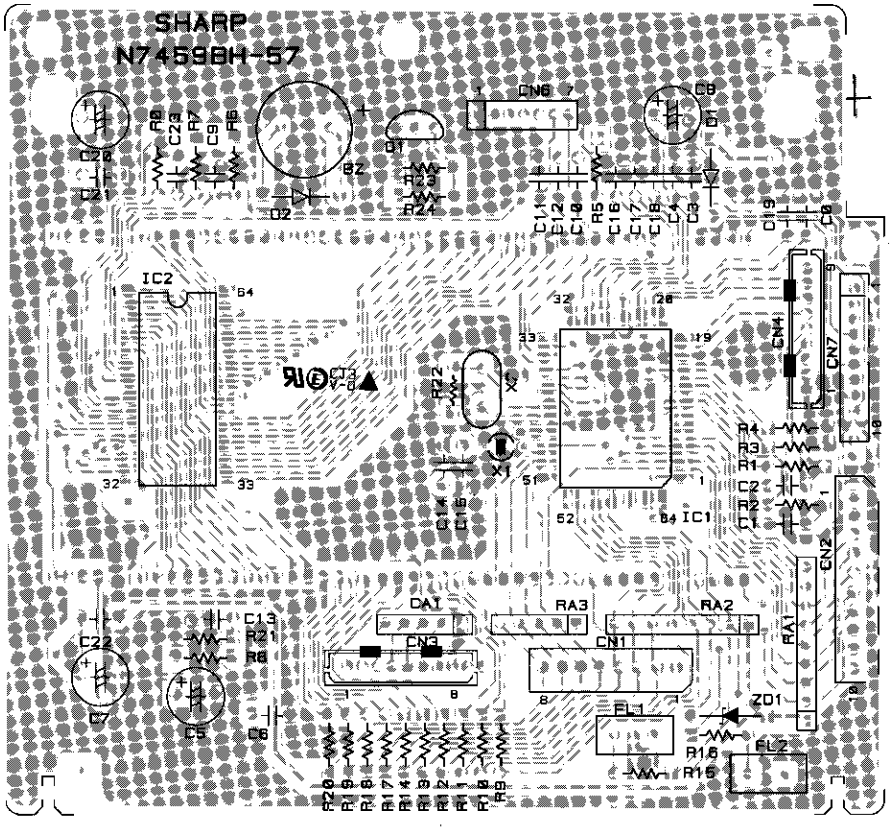

5. POP-up display PWB circuit diagram

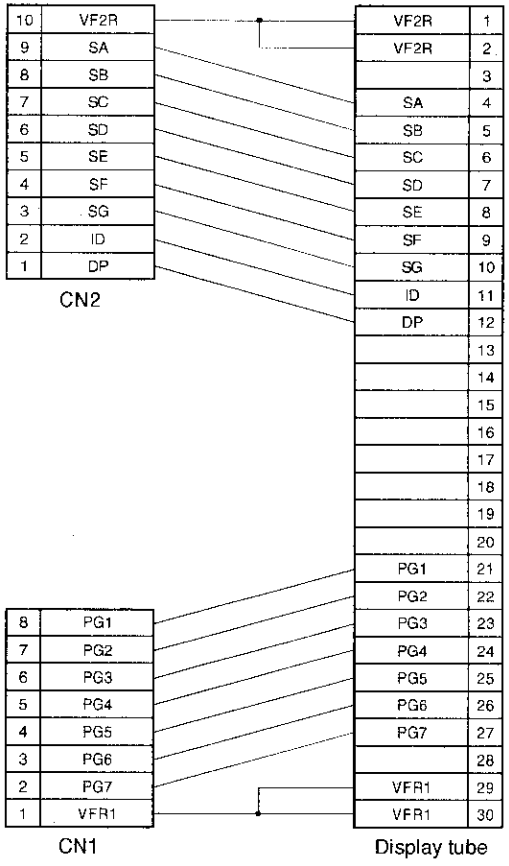

6. POP-up display PWB layout

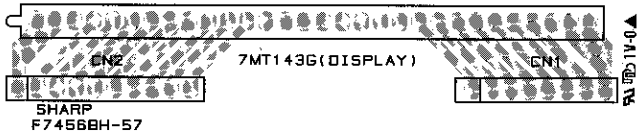

7. IR PWB unit circuit diagram

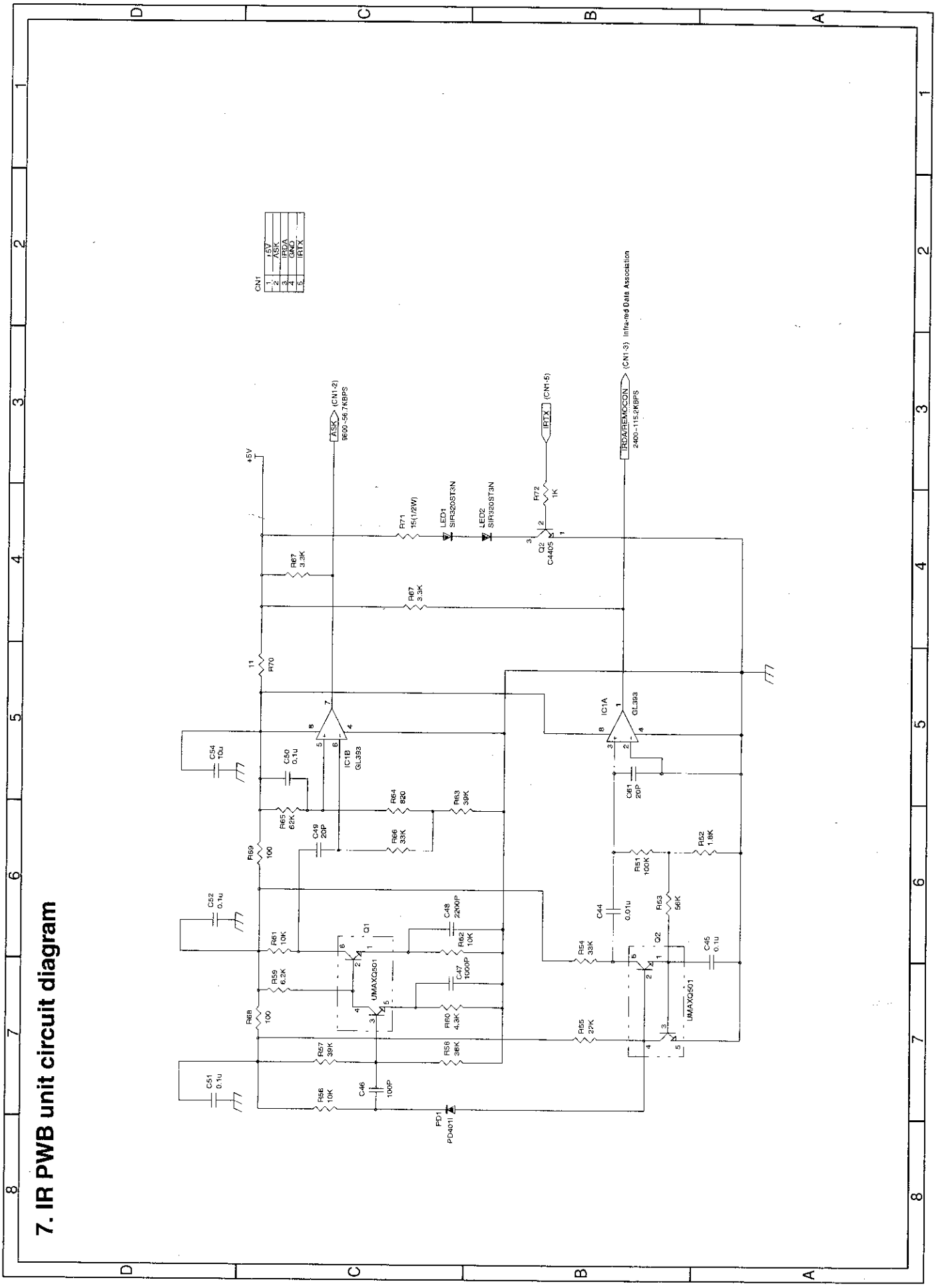

8. IR PWB layout

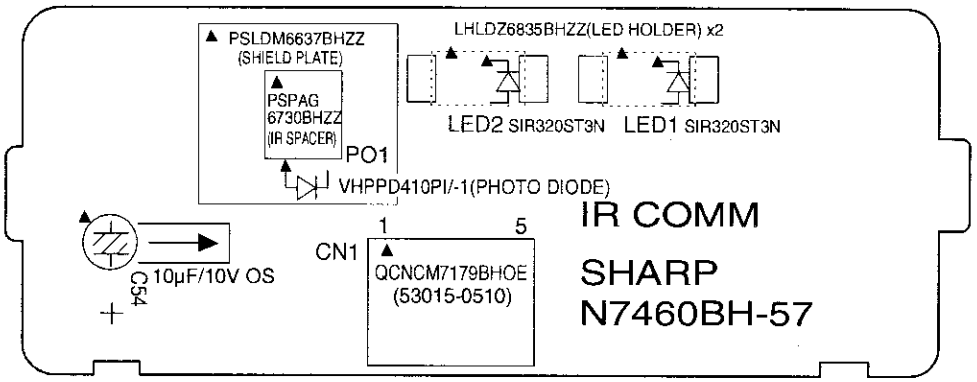

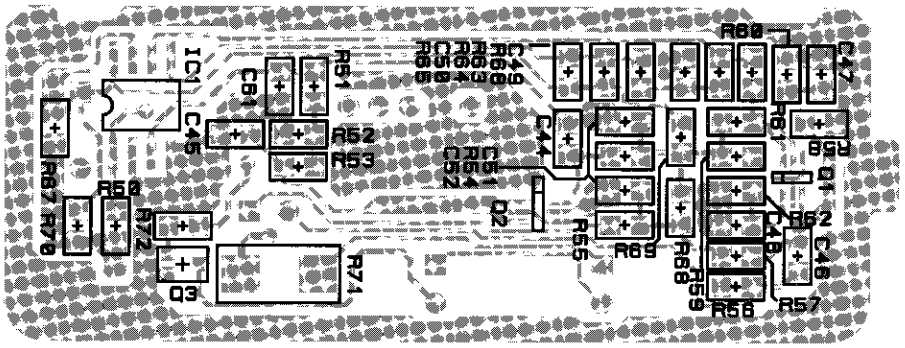

9. Option memory PWB circuit diagram

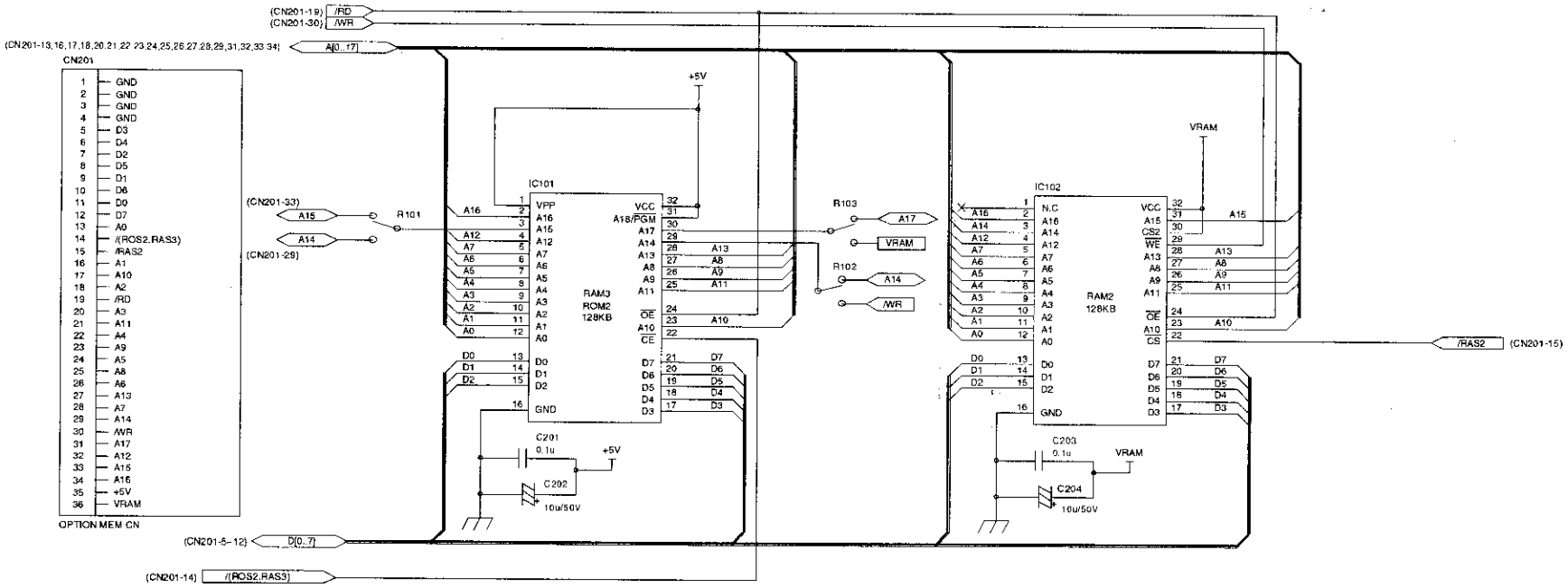

10. Option memory PWB layout

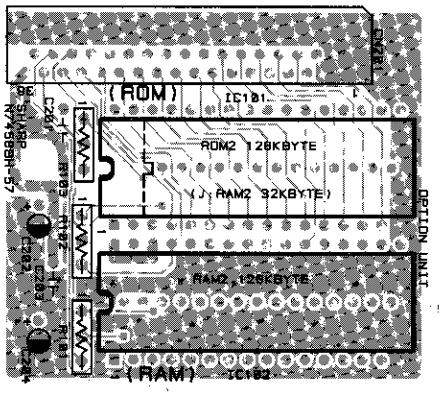

11. Keyboard I/F PWB unit circuit diagram (ER-A460: Normal keyboard)

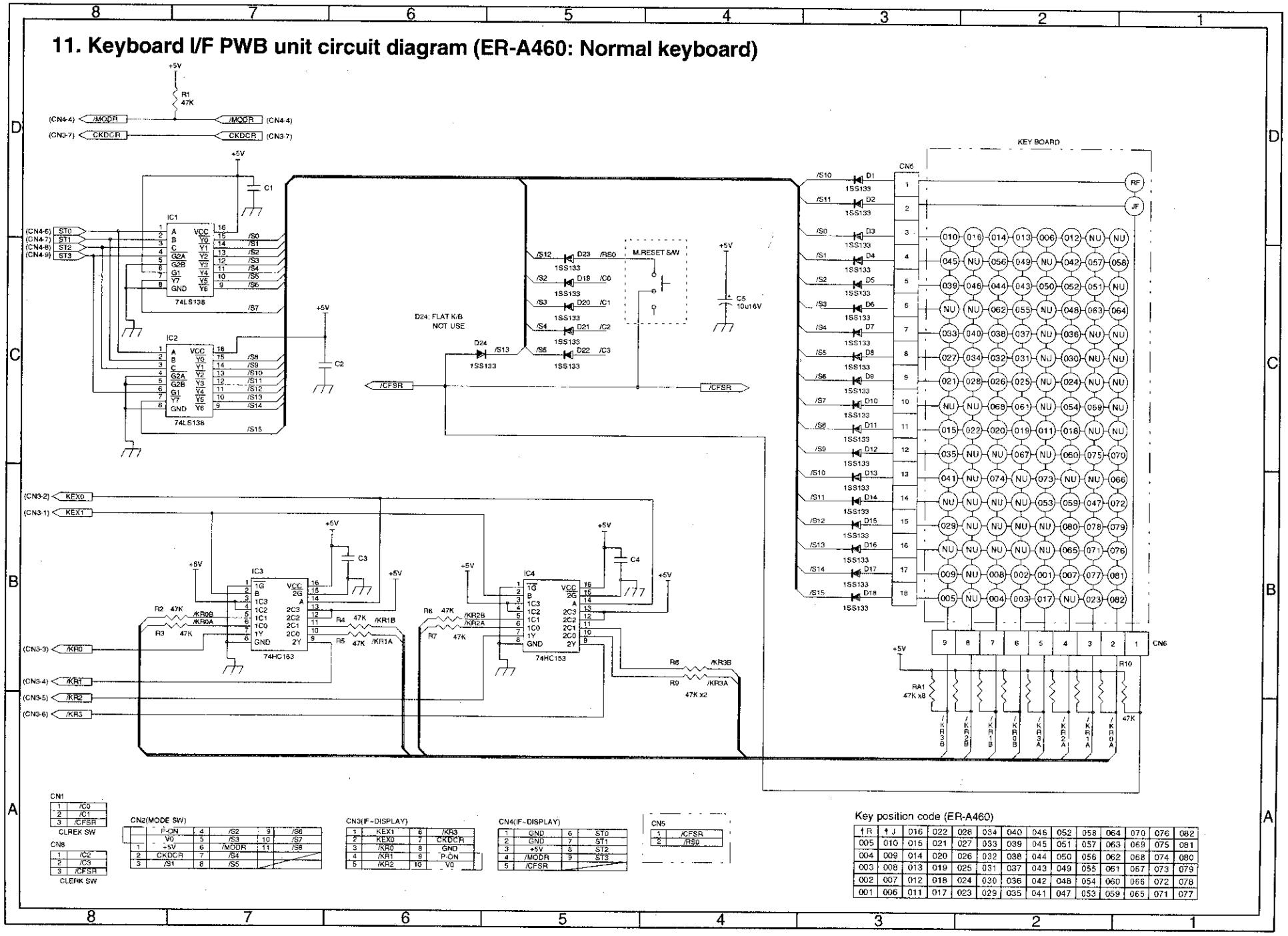

Key position code (ER-A460)

↑R	↑J	016	022	028	034	040	046	052	058	064	070	076	082
005	010	015	021	027	033	039	045	051	057	063	069	075	081
004	009	014	020	026	032	038	044	050	056	062	068	074	080
003	008	013	019	025	031	037	043	049	055	061	067	073	079
002	007	012	018	024	030	036	042	048	054	060	066	072	078
001	006	011	017	023	029	035	041	047	053	059	065	071	077

12. Keyboard I/F PWB unit circuit diagram (ER-A470: Flat keyboard)

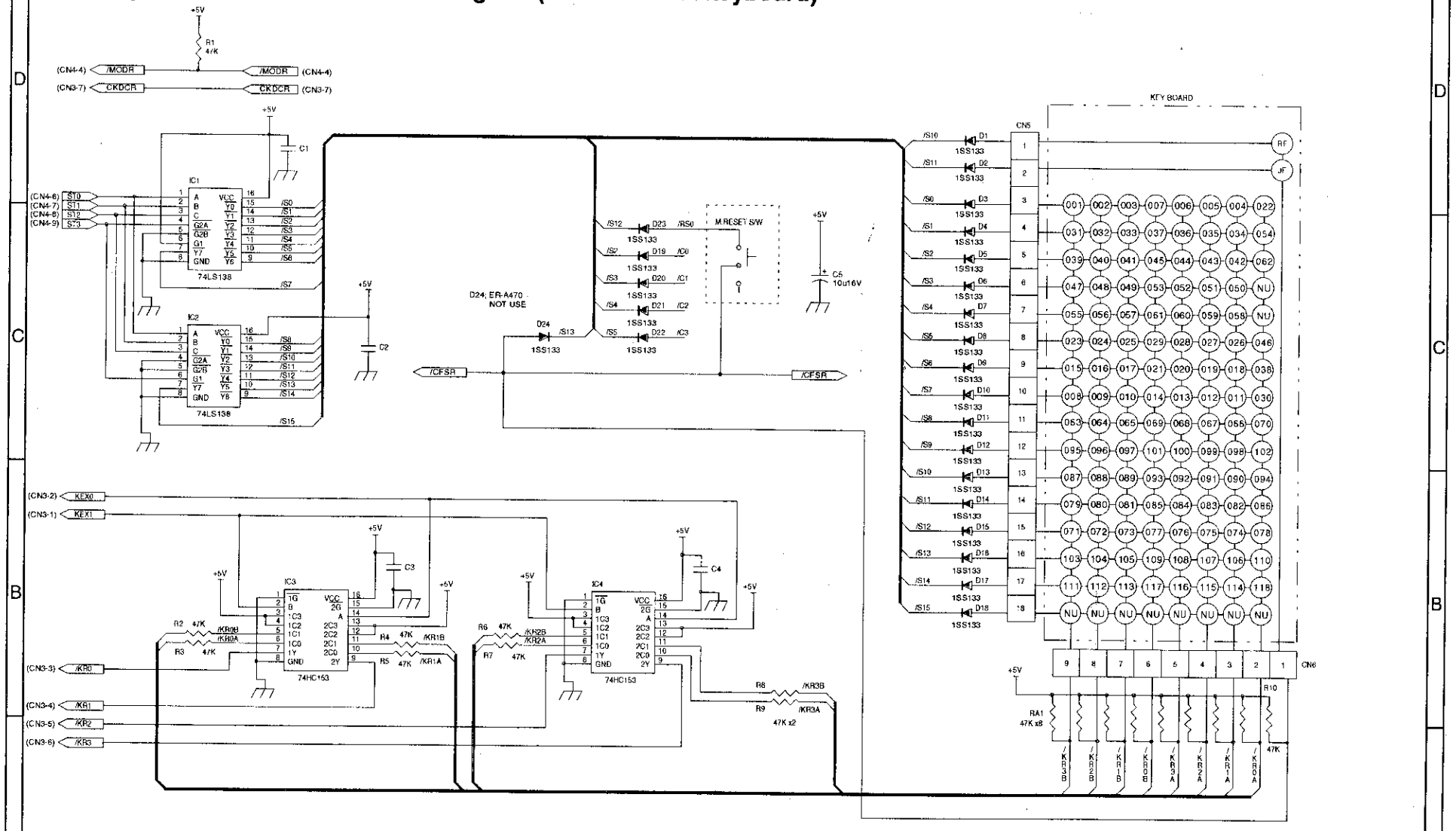

CN1

1	/C0
2	/C1
3	/CFSR

CLREK SW

CN8

1	/C2
2	/C3
3	/CFSR

CLERK SW

CN2(MODE SW)

	P-ON	4	/S2	9	/S6
	V0	5	/S3	10	/S7
1	+5V	6	/MODR	11	/S8
2	CKDCR	7	/S4		
3	/S1	8	/S5		

CN3(IF-DISPLAY)

1	KEX1	6	/KR3
2	KEX0	7	CKDCR
3	/KR0	8	GND
4	/KR1	9	P-ON
5	/KR2	10	V0

CN4(IF-DISPLAY)

1	GND	6	ST0
2	GND	7	ST1
3	+5V	8	ST2
4	/MODR	9	ST3
5	/CFSR		

CN5

1	/CFSR
2	/RS0

Key position code (ER-A470)

↑R	↑J	022	030	038	046	054	062	070	078	086	094	102	110	118
007	014	021	029	037	045	053	061	069	077	085	093	101	109	117
006	013	020	028	036	044	052	060	068	076	084	092	100	108	116
005	012	019	027	035	043	051	059	067	075	083	091	099	107	115
004	011	018	026	034	042	050	058	066	074	082	090	098	106	114
003	010	017	025	033	041	049	057	065	073	081	089	097	105	113
002	009	016	024	032	040	048	056	064	072	080	088	096	104	112
001	008	015	023	031	039	047	055	063	071	079	087	095	103	111

13. Keyboard PWB layout

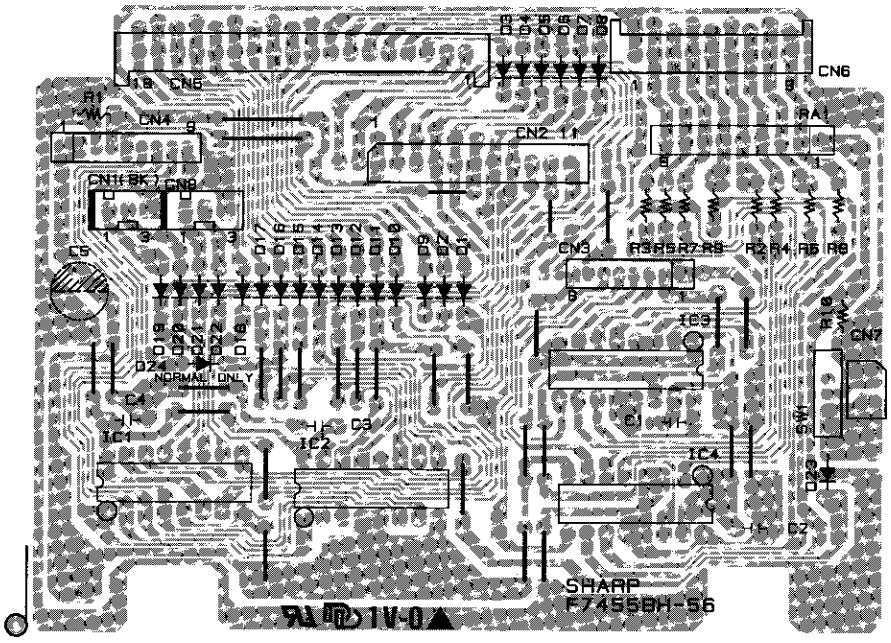

SHARP PARTS GUIDE

MODEL ER-A460 ER-A470

(for KA, KB, TQ, TR, TS)

PRINTER: DP-730

CONTENTS

1 Top cabinet etc.[ER-A460]
2 Top cabinet etc.[ER-A470]
3 Bottom cabinet etc.
4 Drawer box unit(SK423 type)
5 Packing material & Accessories
6 Main PWB unit
7 Key I/F PWB unit
8 Display PWB unit
9 IR PWB unit
10 Pop-up PWB unit
11 ROM/RAM PWB unit
12 Articles for consumption
13 Service route options & Service tools
■ Index

Because parts marked with "⚠" is indispensable for the machine safety maintenance and operation, it must be replaced with the parts specific to the product specification.

Table of destinations

SELECTION CODE	COUNTRIES
U	U.S.A., Guam
A	Canada
TS	Germany
TQ	SEEG territory other than Germany (Stamp: English)
TR	SEEG territory other than Germany (Stamp: Spanish)
KB	U. Kingdom
KA	Australia

SELECTION CODE	COUNTRIES
K	Korea

SELECTION CODE	COUNTRIES
SB	Saudi Arabia (127V area)
SBA	Saudi Arabia (220V area)
SC	Taiwan
SD	Venezuela
SE	Hong Kong
SG	Lebanon, Syria, Greece, Pakistan, Iran, Egypt, Thailand, Iraq, Mauritius, Seychelles, Tahiti, Jordan, Sudan, Turkey
SH	South Africa (U.S.A.version)
SHE	South Africa (Europe version)
SJ	Phillippines (Europe version)
SJ2	Phillippines (U.S.A. version)
SM	Kuwait, Qatar, Oman, UAE, Malta, Bahrain
SMT	Nigeria, Yemen, Kenya

SELECTION CODE	COUNTRIES
RA1	Morocco, Algeria, Tunisia, West Africa
RA2	Chile, Uruguay, Peru, Argentina, Paraguay
RA5	Sri Lanka

SELECTION CODE	COUNTRIES
RB3	Indonesia
RB4	
RB5	Cyprus
RB6	Panama
RB7	Barbados
RB8	Malaysia (U.S.A. version)

SELECTION CODE	COUNTRIES
RC1	Malaysia (Europe version)
RC2	Singapore
RC5	Dominican Republic, Ecuador

1 Top cabinet etc.[ER-A460]

NO.	PARTS CODE	PRICE RANK	NEW MARK	PART RANK	DESCRIPTION
1	PFiLW6942BHZZ	AQ		D	IR filter
2	GCAB-7215BHZZ	AR		D	Pop up cabinet
3	PFiLW6943BHZZ	AS	N	D	Pop up filter
4	CPWBN7460BH01	BB		E	IR PWB unit (include No.52~54)
5	LBNDJ2003SCZZ	AA		C	Cable band (Large)
6	CPWBF7456BH01	BG		E	Pop up PWB unit
7	PFiLW6950BHZZ	AW	N	D	Display filter
8	XBBSC30P06000	AA		C	Screw (3 X 6)
9	GCABB7217BHZZ	BC		D	Top cabinet
10	HPNLC6828BHZZ	AP	N	D	Mode SW panel
11	XHPSD30P06K00	AA		C	Screw (M3 X 6K)
12	PFiLW6951BHZZ	AS		C	Journal filter
13	GCOVA7100BHZZ	AY		D	Printer cover
14	LKGiM7356BHZZ	AK		B	Printer cover lock key
15	DUNT-1817BHZZ	AY		E	Lock key unit (Printer)
16	GCOVA7103BHZZ	AT		D	Ribbon cover
17	LHLDW0008SCZZ	AA		C	Cable holder (5N)
18	XEBSD30P08000	AA		C	Screw (M3 X 8)
19	LANGT7583BHZZ	AS		C	Display angle
20	CPWBN7459BH01	BW		E	Display PWB unit
21	LX-BZ6782BHZZ	AA		C	Screw (3 X 8KS)
22	XJBSD30P10000	AA		C	Screw (M3 X 10)
23	RCORF6699BHZZ	AU		C	Core (BNF-18)
24	LHLDW6820BHZZ	AE		C	Q-clamp (L)
25	LHLDW6821BHZZ	AD		C	Q-clamp (S)
26	XEBSD30P06000	AA		C	Screw (3 X 6)
27	CPWBF7455BH03	BE	N	E	Key PWB unit (Normal)
28	LKGiM7111BHZZ	AE		B	OP key
	LKGiM7129BHZZ	AE		B	MA key
	LKGiM7110BHZZ	AE		B	SM key
29	LKGiW0001BHZZ	AS		B	Mode switch(Body)
30	QCNW-7754BHZZ	AP		C	Mode S/W cable
31	LANGT7582BHZZ	AL		C	Mode SW angle
32	XUPSD23P08000	AA		C	Screw (2.3 X 8)
33	QCNW-7753BHZZ	AP		C	IR cable (5P)
34	PRNGT6639BHZZ	AB		C	Key ring
36	JKNBZ6899BHZZ	AH		C	Key cap (1 X 2)
37	JKNBZ6898BHZZ	AH		C	Key top (1 X 2)
38	JKNBZ6909BHZZ	AK		C	Key top (X)
	JKNBZ6907BHZZ	AK		C	Key top (CL)
	JKNBZ6908BHZZ	AK		C	Key top (.)
	JKNBZ6910BHZZ	AL		C	Key top (0) (1 X 2)
	JKNBZ6911BHZZ	AK		C	Key top (1)
	JKNBZ6912BHZZ	AK		C	Key top (2)
	JKNBZ6913BHZZ	AK		C	Key top (3)
	JKNBZ6914BHZZ	AK		C	Key top (4)
	JKNBZ6915BHZZ	AK		C	Key top (5)
	JKNBZ6916BHZZ	AK		C	Key top (6)
	JKNBZ6917BHZZ	AK		C	Key top (7)
	JKNBZ6918BHZZ	AK		C	Key top (8)
	JKNBZ6919BHZZ	AK		C	Key top (9)
	JKNBZ6920BHZZ	AK		C	Key top (00)
39	JKNBZ6897BHZZ	AG		C	Key cap (1 X 1)
40	JKNBZ6896BHZZ	AG		C	Key top (1 X 1)
42	LFRM-6697BHZZ	BA		C	Key frame
43	PGUMM6724BHZZ	AY		C	Key rubber
44	LPLTM6698BHZZ	AV		C	Base plate
45	CSHEP6833BH01	BA		C	Key sheet unit
46	PSHEP6839BHZZ	AC		C	Display sheet
47	QCNW-7771BHZZ	AF		C	Earth wire
48	QCNW-7770BHZZ	AE		C	Earth wire
49	XEBSD30P10000	AA		C	Screw (3 X 10)
50	LHLDZ6836BHZZ	AE		C	Holder R
51	LHLDZ6837BHZZ	AE		C	Holder L
52	PSLDM6637BHZZ	AG		C	IR shield plate
53	PSPAG6730BHZZ	AE		C	IR spacer
54	PSLDM6638BHZZ	AG		C	Shield sheet
101	TLABH7001BHZZ	AV	N	D	Key label
501	DUNTK4939BHZZ	BR	N	E	Key board(Normal)

1 Top cabinet etc.[ER-A460]

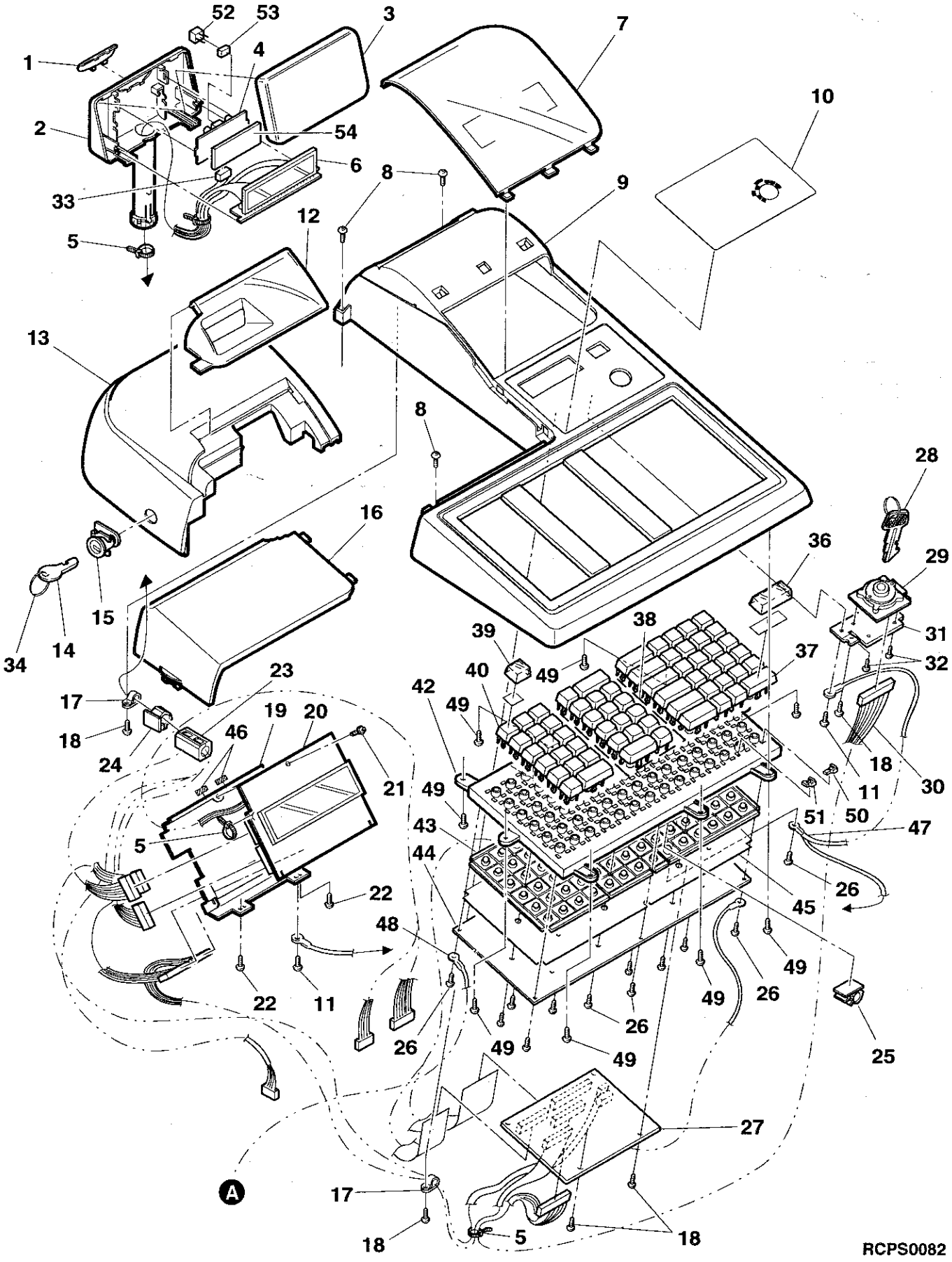

2 Top cabinet etc.[ER-A470]

NO.	PARTS CODE	PRICE RANK	NEW MARK	PART RANK	DESCRIPTION
1	PFiLW6942BHZZ	AQ		D	IR filter
2	GCAB-7215BHZZ	AR		D	Pop up cabinet
3	PFiLW6943BHZZ	AS	N	D	Pop up filter
4	CPWBN7460BH01	BB		E	IR PWB unit (Include No.47~49)
5	LBNDJ2003SCZZ	AA		C	Cable band (Large)
6	CPWBF7456BH01	BG		E	Pop up PWB unit
7	PFiLW6950BHZZ	AW	N	D	Display filter
8	XBBSC30P06000	AA		C	Screw (3 X 6)
9	GCABB7214BHZZ	BC		D	Top cabinet
10	HPNLC6826BHZZ	AP	N	D	Mode SW panel
11	XHPSD30P06K00	AA		C	Screw (M3 X 6K)
12	PFiLW6951BHZZ	AS		C	Journal filter
13	GCÕVA7100BHZZ	AY		D	Printer cover
14	LKGiM7356BHZZ	AK		B	Printer cover lock key
15	DUNT-1817BHZZ	AY		E	Lock key unit (Printer)
16	GCÕVA7103BHZZ	AT		D	Ribbon cover
17	LHLDW0008SCZZ	AA		C	Cable holder (5N)
18	XEBSD30P08000	AA		C	Screw (M3 X 8)
19	LANGT7583BHZZ	AS		C	Display angle
20	CPWBN7459BH01	BW		E	Display PWB unit
21	LX-BZ6782BHZZ	AA		C	Screw (3 X 8KS)
22	XJBSD30P10000	AA		C	Screw (M3 X 10)
23	RCÕRF6699BHZZ	AU		C	Core (BNF-18)
24	LHLDW6820BHZZ	AE		C	Q-clamp (L)
25	LHLDW6821BHZZ	AD		C	Q-clamp (S)
26	XHPSD26P08000	AA		C	Screw (2.6 X 8)
27	CPWBF7455BH04	BE	N	E	Key PWB unit (Flat)
28	LKGiM7111BHZZ	AE		B	OP key
	LKGiM7129BHZZ	AE		B	MA key
	LKGiM7110BHZZ	AE		B	SM key
29	LKGiW0001BHZZ	AS		B	Mode switch(Body)
30	QCNW-7754BHZZ	AP		C	Mode SW cable
31	LANGT7582BHZZ	AL		C	Mode SW angle
32	XUPSD23P08000	AA		C	Screw (2.3 X 8)
33	QCNW-7753BHZZ	AP		C	IR cable (5P)
34	PRNGT6639BHZZ	AB		C	Key ring
36	GCÕVB7101BHZZ	BF		D	Key cover A
37	PSHEK6829BHZZ	AR	N	D	Key Sheet(Standard)
38	PSHEK6830BHZZ	AU	N	D	Sheet(Programing)
39	PSHEK6828BHZZ	AK		D	Blank key sheet
40	GCÕVB7102BHZZ	BA		D	Key cover B
41	DUNTK4938RCZZ	BE		E	Key board (Flat)
42	LHLDZ6838BHZZ	AD		C	I/F holder
43	PSHEP6840BHZZ	AE		C	Water proof sheet
44	QCNW-7771BHZZ	AF		C	Earth wire
45	QCNW-7770BHZZ	AE		C	Earth wire
46	PSHEP6839BHZZ	AC		C	Display sheet
47	PSLDM6637BHZZ	AG		C	IR shield plate
48	PSPAG6730BHZZ	AE		C	IR spacer
49	PSLDM6638BHZZ	AG		C	Shield sheet

2 Top cabinet etc.[ER-A470]

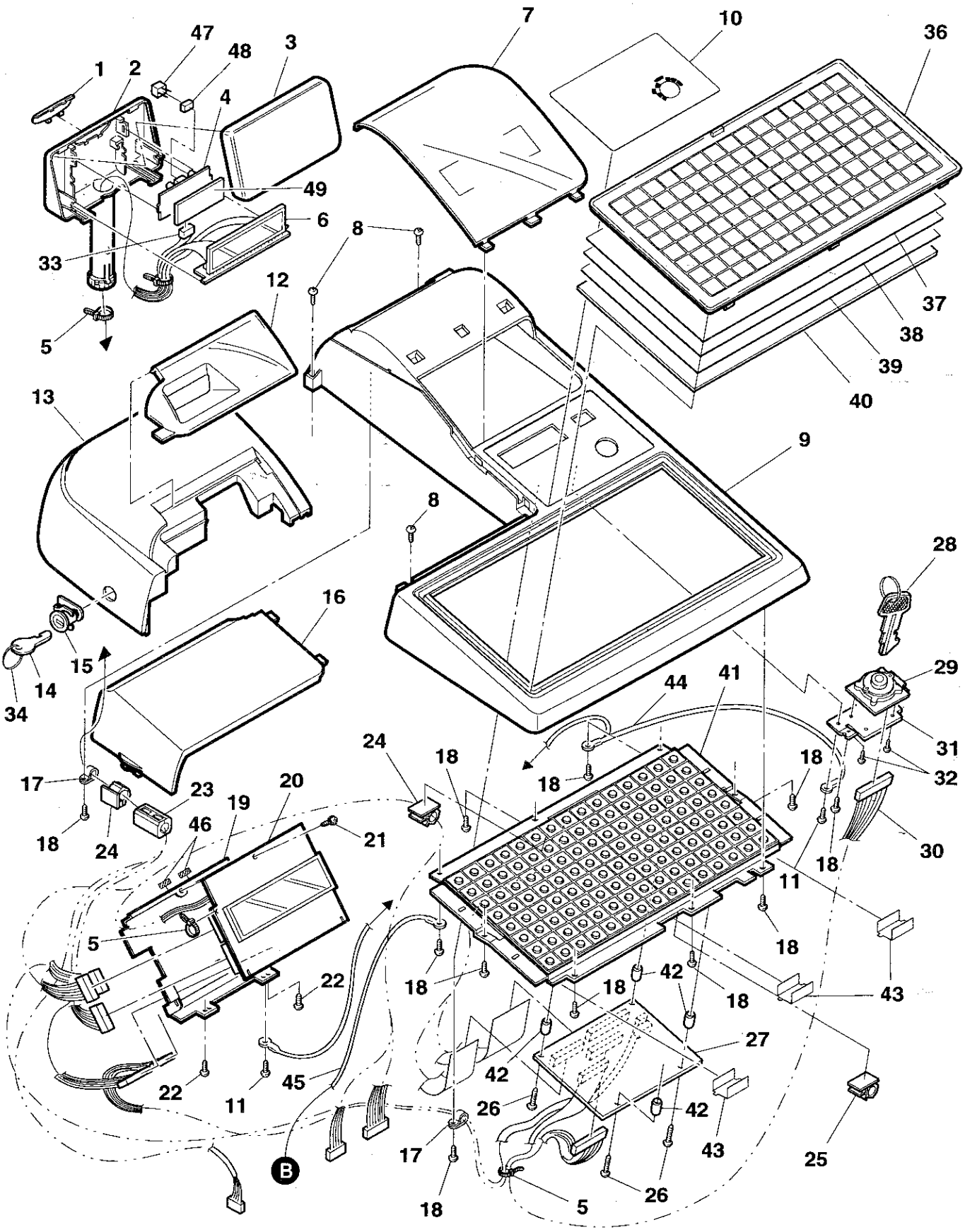

RCPS0083

3 Bottom cabinet etc.

	NO.	PARTS CODE	PRICE RANK	NEW MARK	PART RANK	DESCRIPTION
⚠	1	QACCL1018CCN1	AV		B	AC cord (7.5A) [KA]
⚠		QACCE3120QCN5	AL		B	AC cord (250V 2.5A) [TQ,TR,TS]
⚠		QCNW-1035CCZZ	AL		B	AC cord [KB]
⚠		QPLGA0006QCZZ	AQ		C	Plug (3A 250V) [KB]
	2	XUBSD40P08000	AA		C	Screw (4 × 8)
⚠	3	RTRNP6880BHZZ	BE	N	B	Power transformer (AC 220V) [TQ,TR,TS]
⚠		RTRNP6881BHZZ	BE	N	B	Power transformer (AC 240V) [KA,KB]
	4	LBNDJ2003SCZZ	AA		C	Cable band
	5	QCNW-7768BHZZ	AE		C	Earth wire
	6	XHPSD30P06K00	AA		C	Screw (M3 × 6K)
	7	XEBSD30P08000	AA		C	Screw (M3 × 8)
	8	LHLDW0006SCZZ	AB		C	Cable holder (3N)
	9	XHPSD30P06000	AA		C	Screw (3 × 6)
	10	QCNW-7764BHZZ	AK		C	Earth wire
	11	Ki-OB6778RCZZ	BY		E	Printer (DP-730)
	12	XJPSD30P12X00	AB		C	Screw (3 × 12X)
	13	PGUMM6699RCZZ	AB		C	Printer cushion
	14	CPWBN7457BH02	CC	N	E	Main PWB unit
	15	CPWBN7458BH01	BK		E	ROM/RAM PWB unit
	16	QCNW-7749BHZZ	AP		C	Flat cable
	17	GCOVA7105BHZZ	AU		D	ROM/RAM case
	18	GCOVA7107BHZA	AL		D	Cleak cover A
	19	GCABA7216BHZA	BH	N	D	Bottom cabinet
	20	LPLTP6697BHZZ	AP		C	Paper plate (Dot)
	21	LX-BZ1085CCZZ	AA		C	Screw (3 × 8)
	22	XBBSC30P20000	AA		C	Screw (3 × 20)
	23	GCOVA7104BHZZ	AV		D	Rear cover
	24	LX-BZ6782BHZZ	AA		C	Screw
	25	GCOVH7106BHZZ	AU		D	Trans cover
	26	XUPSD40P12000	AA		C	Screw (M4 × 12)
	27	RCORF6699BHZZ	AU		C	Core (BNF-18)
	28	LBNDJ6636BHZZ	AD		C	B/T band
	30	QCNW-7752BHZZ	AH		C	PS cable
	31	TCAUS6677BHZZ	AD		D	Caution label
	32	LHLDW0008SCZZ	AA		C	Cable holder (5N)
	33	LHLDW6821BHZZ	AD		C	Q-clamp (S)
	34	RCORF6700BHZZ	AS		C	Core
	35	LBNDJ2004BHZZ	AB		C	Nylon band (140mm)
	36	LCHSM6704BHZZ	AY	N	C	Main chassis
	37	XHPSD40P08KS0	AA		C	Screw (M4 × 8)
	38	XJBSD30P10000	AA		C	Screw (3 × 10)
	39	LHLDQ6839BHZZ	AL	N	C	S/W holder
	40	PSTM-6793RCZZ	AU	N	C	Stamp(English) [KA,KB,TQ,TR]
		PSTM-6798RCZZ	AV	N	C	Stamp(German) [TS]
	41	RCORF6696BHZZ	AL	N	C	Core (TC28A)

3 Bottom cabinet etc.

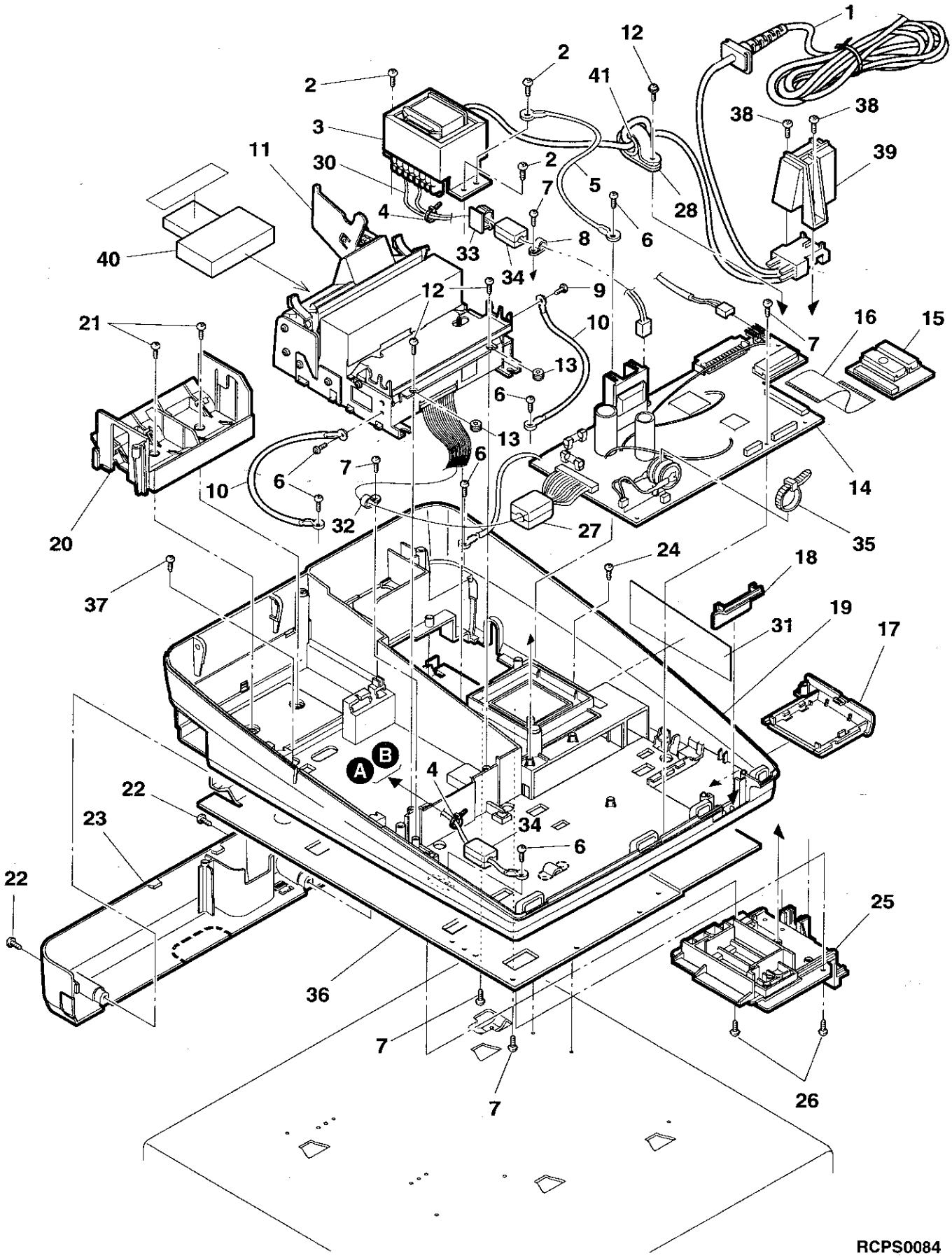

RCPS0084

4 Drawer box unit(SK423 type)

NO.	PARTS CODE	PRICE RANK	NEW MARK	PART RANK	DESCRIPTION	STD DW	SRV OP
2	CCABM7218BH04	BG	N	D	Cabinet Frame unit	○	
	CCABM7172BHZZ	BN		D	Cabinet unit (Top side:flat)		○
3	PGUMM6695BHZZ	AE		D	Stopper gum	○	○
4	NRŌLP6650BHZZ	AP		C	Roller	○	○
5	XUBSD30P08000	AA		C	Screw (3 × 8)	○	○
6	LBRC-6663BHZZ	AQ		C	Bill bracket	○	○
7	MSPRT6714BHZZ	AE		C	Bill spring	○	○
8	MLEVF6695BHZZ	AK		C	Bill lever	○	○
9	PSKR-6629BHZZ	AL		C	Bill separator	○	○
10	SSAKA5004CCZZ	AA		D	Vinyl bag (100 × 300mm)	○	○
11	PSKR-6628BHZZ	AG		C	Separator	○	○
12	GCAS-6678BHZZ	BC		D	Money case (4B/8C)	○	○
13	LX-BZ6776BHZZ	AA		C	Screw	○	○
14	QSW-M6872BHZZ	AR		B	Micro switch	○	○
15	RPLU-6639BHZZ	AZ		B	Plunger	○	
	CPLU-6641BH02	BD		B	Plunger		○
16	CFRM-6683BH01	AW		C	Lock frame unit	○	○
17	LX-BZ6775BHZZ	AA		C	Screw	○	○
18	MSPRT6713BHZZ	AD		C	Open lever spring	○	○
20	XRESJ50-06000	AA		C	E type ring (5mm)	○	○
21	MCAMM6633BHZZ	AG		C	Key cam	○	○
22	LFRM-6682BHZZ	AN		C	Bell frame	○	○
23	XWSSD40-10000	AA		C	Washer (4mm)	○	○
24	XNESD40-32000	AA		C	Nut (M4)	○	○
25	PGUMM6696BHZZ	AE		D	Gum leg	○	○
26	XHBSD30P12000	AA		C	Screw (3 × 12)	○	○
27	MSPRC6712BHZZ	AF		C	Push out spring	○	○
28	NRŌLP6650BHZZ	AP		C	Roller	○	○
29	XNESD60-50000	AA		C	Nut (M6)	○	○
30	XWSSD60-15000	AA		C	Washer (6mm)	○	○
31	GDRW-6678BHZZ	BF		C	Drawer case frame unit	○	○
32	GCŌVA7036BHZZ	AS		D	Front cover	○	○
33	LKGiW7330BHZZ	AY		B	Lock key (Body)	○	○
34	PRNGT6637BHZZ	AA		C	Key ring	○	○
35	LKGiM7331BHZZ	AE		B	Lock key (1pc)	○	○
36	MSPRK6718BHZZ	AF		C	Lock key spring	○	○
37	LPLTM6674BHZC	AY		D	Bottom plate	○	
	LPLTM6674BHZA	AX	N	D	Bottom plate		○
38	SPAKA8255BHZZ	AC		D	Paper pad	○	○
39	XHBSD40P15000	AA		C	Screw (4 × 15)	○	○
40	MSPRB6711BHZZ	AD		C	Earth spring	○	○
41	XHPSC30P08000	AA		C	Screw (3 × 8)	○	○
42	DUNT-1306BHZZ	AX		E	Lock key unit	○	○
43	RALML6647BHZZ	AR		B	Bell		○
44	XBPSD40P06K00	AA		C	Screw (M4 × 6K)		○
45	NSFTM6650BHZZ	AD		C	Bell hammer		○
46	MSPRC6715BHZZ	AE		C	Bell spring		○
47	XBPSD40P06000	AA		C	Screw (M4 × 6)		○
48	LHLDW4081CCZZ	AC		C	Cable holder		○
49	XHPSC30P08000	AA		C	Screw (3 × 8)		○
50	QCNW-7632BHZZ	AQ		C	Earth wire		○
52	SSAKH3012CCZZ	AA		D	Vinyl bag		○
53	XUBSD30P08000	AA		C	Screw (3 × 8)		○
54	RCŌRF6698BHZZ	AR		C	Core		○
55	RCŌRF6699BHZZ	AU		C	Core		○
56	SSAKA5004CCZZ	AA		D	Vinyl bag		○
501	CCAS-6678BH01	BF		E	Money case unit	○	○
502	GDRW-6678BHZA	BG		E	Drawer case unit	○	○
503	CLŌK-6683BHZB	BK		E	Lock unit (include No.13~18)	○	
	CLŌK-6683BHZC	BF		E	Lock unit (include No.13~18)		○
504	CFRM-6682BH02	AQ		E	Bell frame unit (include No.22,25~27)	○	
	CFRM-6682BH03	AV	N	E	Bell frame unit (include No.22,25~27,43~47)		○
	(Unit)						
901	GBŌXD7134BHZA	BU	N	E	Drawer box unit	○	
	CBŌXD7136BH01	BU	N	E	Remote drawer box unit		○

NOTE 1: STD : Standard parts
SRV OP : OPtional parts as service route

4 Drawer box unit(SK423 type)

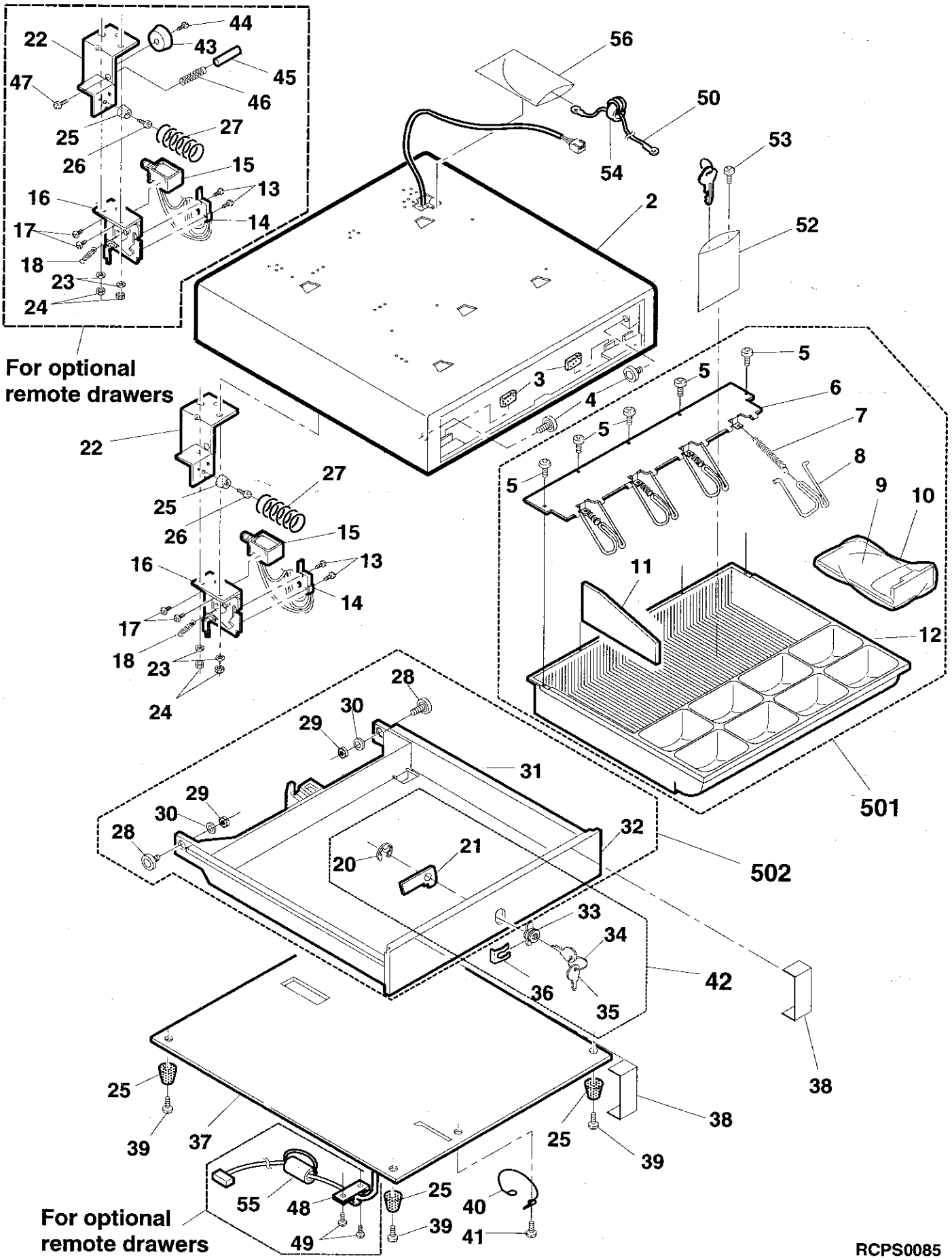

5 Packing material & Accessories

NO.	PARTS CODE	PRICE RANK	NEW MARK	PART RANK	DESCRIPTION	ER-A460	ER-A470
1	SPAKC8338BHSC	BA	N	D	Packing case	○	
	SPAKC8338BHSA	BA	N	D	Packing case		○
2	SPAKA8337BHZL	AU		D	Packing add L	○	○
3	PSHEP6681BHZZ	AF		D	Packing sheet (1000 X 1000)	○	○
4	SPAKA8337BHZR	AU		D	Packing add R	○	○
5	SSAKH4231CCZZ	AA		D	Vinyl sack (140 X 500)	○	○
6	TiNSE7331BHZZ	AZ	N	D	Instruction book (E) (1)	○	○
	TiNSF7332BHZZ	AZ	N	D	Instruction book (F) (1) [TQ,TR,TS]	○	○
	TiNSG7333BHZZ	AZ	N	D	Instruction book (G) (1) [TQ,TR,TS]	○	○
	TiNSS7334BHZZ	AZ	N	D	Instruction book (S) (1) [TQ,TR,TS]	○	○
7	TiNSE7331BHZA	AX	N	D	Instruction book (E) (2)	○	○
	TiNSF7332BHZA	AX	N	D	Instruction book (F) (2) [TQ,TR,TS]	○	○
	TiNSG7333BHZA	AX	N	D	Instruction book (G) (2) [TQ,TR,TS]	○	○
	TiNSS7334BHZA	AX	N	D	Instruction book (S) (2) [TQ,TR,TS]	○	○
8	SSAKH3015CCZZ	AA		D	Vinyl bag (200 X 300mm)	○	○
9	SSAKH3012CCZZ	AA		D	Vinyl sack (80 X 120)	○	○
10	LKGiM7356BHZZ	AK		B	Printer cover lock key	○	○
11	LKGiM7331BHZZ	AE		B	Lock key(drawer) (1pc)	○	○
12	LKGiM7111BHZZ	AE		B	OP key	○	○
	LKGiM7129BHZZ	AE		B	MA key	○	○
	LKGiM7110BHZZ	AE		B	SM key	○	○
13	TCADH6795BHZZ	AC		D	Caution card (Red)	○	○

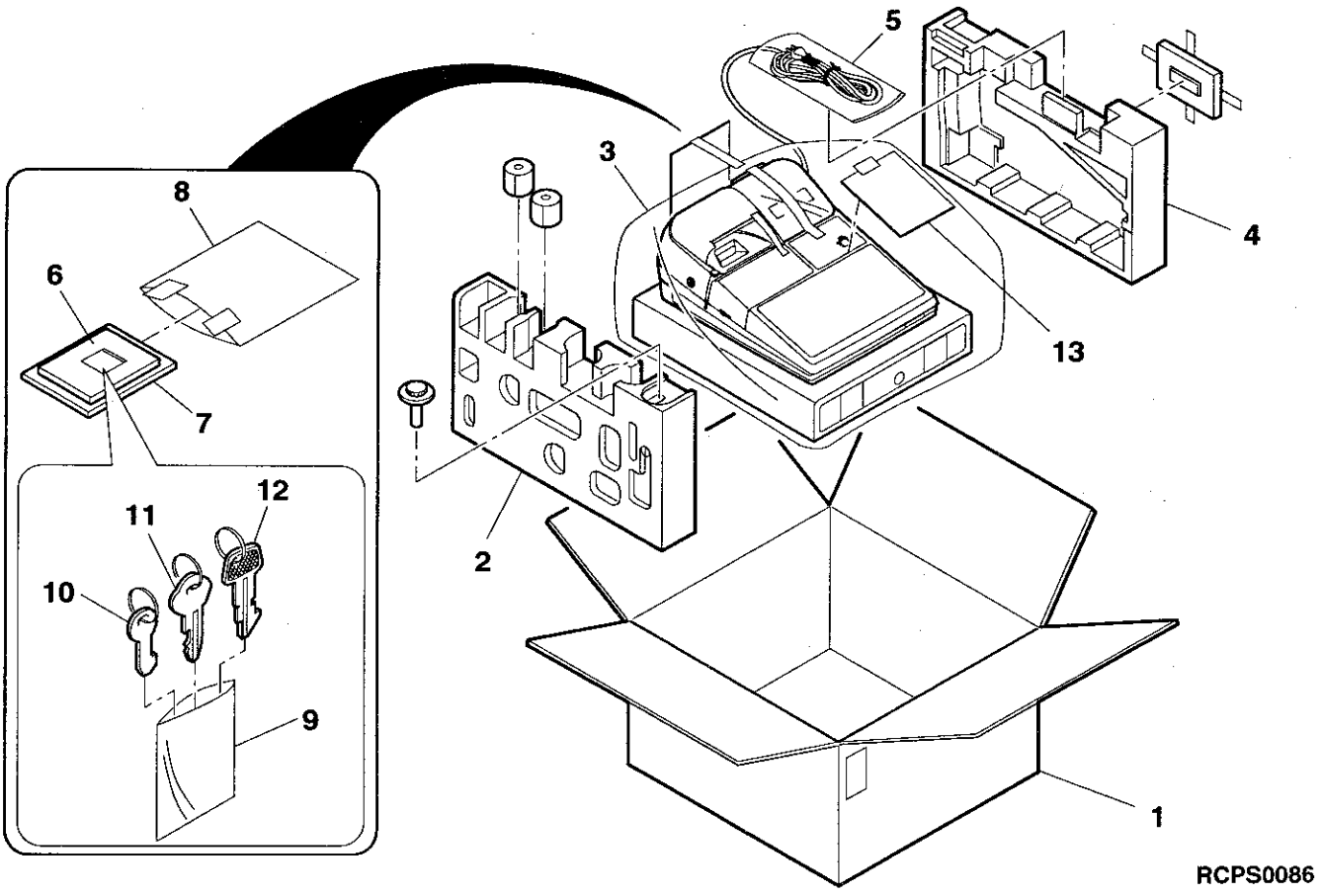

6 Main PWB unit

NO.	PARTS CODE	PRICE RANK	NEW MARK	PART RANK	DESCRIPTION	
1	VHiiR9393N/-1	AD		B	IC (IR9393N)	[IC2]
2	VHiSN74HC00NS	AC		B	IC (GD74HC00)	[IC3]
3	VHiH641510810	BA		B	IC (H641510810)	[IC6]
4	VHiLZ9AH30/-1	BA		B	IC (LZ9AH30)	[IC7]
5	VRD-RC2EY103J	AA		C	Resistor (1/4W 10KΩ ±5%)	[R25,43,44,45,46,50,51,68,70,77,78,80,88,89]
6	VRD-RC2EY102J	AA		C	Resistor (1/4W 1.0KΩ ±5%)	[R48,49,53,54,55,56,74,75,76]
7	VRD-RC2EY473J	AA		C	Resistor (1/4W 47KΩ ±5%)	[R7,72]
8	VRD-RC2EY221J	AA		C	Resistor (1/4W 220Ω ±5%)	[R9]
9	VRD-RC2EY331J	AA		C	Resistor (1/4W 330KΩ ±5%)	[R10,11]
10	VRD-RC2EY202J	AA		C	Resistor (1/4W 2.0KΩ ±5%)	[R13,16]
11	VRD-RC2EY332J	AA		C	Resistor (1/4W 3.3KΩ ±5%)	[R15,62,65,86]
12	VRNRC2EK1303F	AA		C	Resistor (1/4W 130KΩ ±1%)	[R12]
13	VRD-RC2EY623J	AA		C	Resistor (1/4W 62KΩ ±5%)	[R14]
14	VRD-RC2EY222J	AA		C	Resistor (1/4W 2.2KΩ ±5%)	[R59]
15	VRD-RC2EY822G	AA		C	Resistor (1/4W 8.2KΩ ±2%)	[R19]
16	VRD-RC2EY153G	AA		C	Resistor (1/4W 15KΩ ±2%)	[R20]
17	VRD-RC2EY272J	AA		C	Resistor (1/4W 2.7KΩ ±5%)	[R22,24,61,64]
18	VRD-RC2EY912G	AA		C	Resistor (1/4W 9.1KΩ ±2%)	[R21]
19	VRD-RC2EY563J	AA		C	Resistor (1/4W 56KΩ ±5%)	[R23]
20	VRD-RC2EY472J	AA		C	Resistor (1/4W 4.7KΩ ±5%)	[R39,40,41,42,47,73]
21	VRD-RC2EY562J	AA		C	Resistor (1/4W 5.6KΩ ±5%)	[R8,52,60,63,66,69]
22	VRD-RC2EY223J	AA		C	Resistor (1/4W 22KΩ ±5%)	[R92]
23	VRNRC2EK1002F	AA		C	Resistor (1/4W 10KΩ ±1%)	[R37]
24	VRNRC2EK1201F	AA		C	Resistor (1/4W 1.2KΩ ±1%)	[R38]
25	VRD-RC2EY330J	AA		C	Resistor (1/4W 33Ω ±5%)	[R26~36]
26	VRD-RC2EY273J	AA		C	Resistor (1/4W 27KΩ ±5%)	[R93]
27	VHDDSS133HV-1	AA		B	Diode (DSS133HV)	[D6,8]
28	VHDEU1Z////-1	AB		B	Diode (EU1Z)	[D2,3]
29	VHD1N4002G/-1	AA		B	Diode (1N4002G)	[D1,4,5]
30	VHERD6.2EB2-1	AB		B	Zener diode (RD6.2EB2)	[ZD1]
31	VHEMTZ5.6A/-1	AA		B	Zener diode (MTZ5.6A)	[ZD2]
32	VHEMTZ5.1A/-1	AC		B	Zener diode (MTZ5.1A)	[ZD5]
33	VHEE102////-1	AC		B	Zener diode (E102)	[ZD3]
34	RCORF6671BHZZ	AK		C	Core	[FB1,2]
35	VRD-RC2EY470J	AA		C	Resistor (1/4W 47Ω ±5%)	[R79]
36	VRD-RC2EY000J	AA		C	Resistor (1/4W 0Ω ±5%)	[C59]
37	VSDSC001-B/-1	AA		B	Transistor (DSC001-B) (KTC3198GR)	[Q3,4,7,8,9,113]
38	VS2SA673-//-1	AD		B	Transistor (2SA673) (KTA1270Y)	[Q6]
39	VCEAGA1HW107M	AA		C	Capacitor (50WV 100μF)	[C5]
40	VCEAGA1CW477M	AB		C	Capacitor (16WV 470μF)	[C1]
41	VCEAGA1CW337M	AB		C	Capacitor (16WV 330μF)	[C13]
42	VCEAGA1CW107M	AC		C	Capacitor (16WV 100μF)	[C12]
43	VCEAGA1HW106M	AA		C	Capacitor (50WV 10μF)	[C8]
44	VCEAGA1HW335M	AB		C	Capacitor (50WV 3.3μF)	[C9]
45	VCEAGA1HW105M	AB		C	Capacitor (50WV 1μF)	[C15]
46	RC-KZ1054CCZZ	AB		C	Capacitor (50WV 0.1μF)	[C17,19,90,91,92,95,97]
47	RC-EZ106ARC1A	AD		C	Capacitor (10WV 10μF)	[C18,20,93,96]
48	RC-EZ476ARC1A	AF		C	Capacitor (10WV 47μF)	[C94]
49	VCKYPU1HB102K	AA		C	Capacitor (50WV 1000PF)	[C16,21,22,82,83,85,86,88,191]
50	VCQYNA1HM103K	AA		C	Capacitor (50WV 0.010μF)	[C14,69,84]
51	VCKYPU1HB331K	AA		C	Capacitor (50WV 330pF)	[C23,25~26,60~62,64~68,74~80]
52	VCKYPU1HB101K	AA		C	Capacitor (50WV 100PF)	[C57,58,81]
53	VCKYPU1HB471K	AA		C	Capacitor (50WV 470PF)	[C98,99,100,101,102]
54	VCQYNA1HM333K	AA		C	Capacitor (50WV 0.033μF)	[C1]
55	VCQYNU1HM104K	AB		C	Capacitor (50WV 0.10μF)	[C87]
56	QFSHD2109AFZZ	AC		C	Fuse holder (HD2109AF)	
57	VCEAGA1HW476M	AB		C	Capacitor (40WV 47μF)	[C10]
58	VCKYPU1HB332K	AA		C	Capacitor (50WV 3300pF)	[C7]
59	VCCSPU1HL470J	AA		C	Capacitor (50WV 47pF)	[C63]
60	RVR-M2517BHZZ	AL		B	Variable resistor (200K)	[VR1]
61	RMPTC8103QCKB	AD		B	Block resistor (10KΩ × 8 1/8W ±10%)	[RA1,2,3,4]
62	RMPTC8102QCKB	AD		B	Block resistor (1.0KΩ × 8 1/8W ±10%)	[RA9]
63	RMPTC6103QCKB	AC		B	Block resistor (10KΩ × 6 1/8W ±10%)	[RA5,6,7,8]
64	VHi27020RAU1A	BD	N	B	IC (27020RAU1A)	[IC4]
65	VHiSTR2024/-1	AR		B	IC (STR2024)	[IC1]
66	VHiHM62256L15	BR		B	IC (HM62256L15)	[IC5]
67	QSOCZ2042SC32	AE		C	IC socket (32pin)	[IC4]
68	VHiSTA401A/-1	AP		B	IC (STA401)	[IC8,9]
69	VHiM54567P/-1	AK		B	IC (M54567P)	[IC10]
70	PRDAF6654BHZZ	AM		C	Heat sink	[(IC1)]
71	XBPSD30P10000	AA		C	Screw (M3 × 10)	[(IC1)]
72	LX-BZ6644BHZZ	AA		C	Screw (M3.5 × 8S)	[(IC1)]
73	VHERD4.3EL1-1	AA		B	Zener diode (RD4.3EL1)	[ZD4]
74	VHDCP301///-1	AL		B	Diode (CP301)	[DB1]
75	VS2SC4153-/-1	AG		B	Transistor (2SC4153)	[Q2]
76	VCEAGA1HW228M	AB		C	Capacitor (50WV 2200μF)	[C4]
77	VCEAGU1HW478M	AL		C	Capacitor (50WV 4700μF)	[C2]
⚠ 78	QFS-C2521TAZZ	AE		A	Fuse (T2.5AL/250V)	[F1]
⚠ 79	QFS-C4301CCZZ	AE		A	Fuse (T800mA/250V)	[F2]
⚠ 80	RTRNH6882RCZZ	AM		B	Converter transformer	[T1]

6 Main PWB unit

NO.	PARTS CODE	PRICE RANK	NEW MARK	PART RANK	DESCRIPTION	
81	RCILC6653BHZZ	AS		C	Coil (180μH)	[L1]
82	RCRSZ6674RCZZ	AG		B	Ceramic resonator (14.7MHz)	[X2]
83	QCNCM1101CCZZ	AB		C	Connector (2pin) (5273-02A)	[CN1]
84	QCNCM5278NCZZ	AC		B	Connector (3pin) (5046-03A)	[DRCN1,2]
85	PRDAF6656BHZZ	AK		C	Heat sink	[(Q2)]
86	QCNCM6865RC0B	AA		B	Connector (2pin) (5267-02A)	[CN13(NEJ)]
87	QCNCM7073RC6H	AM		C	Connector (68pin)	[CN7]
88	QCNCM7176BH0G	AD		C	Connector (53014-0710)	[CN9]
89	QCNCM7176BH1J	AD		C	Connector (53014-1010)	[CN10]
90	QCNCM7176BH0E	AC		C	Connector (53014-0510)	[CN15]
91	QCNCM7178BH3F	AL		C	Connector (52044-3610)	[CN11]
92	QCNW-7750BHZZ	BA		C	Printer cable (30P)	[CN12]
93	XBPSD30P06000	AA		C	Screw (M3 × 6)	[(Q2)]
94	VCQYNA1HM224K	AC		C	Capacitor (50WV 0.22μF)	[C105]
95	VRD-RC2EY103J	AA		C	Resistor (1/4W 10KΩ ±5%)	
96	VCKYPU1HB331K	AA		C	Capacitor (50WV 330pF)	
97	QCNW-7765BHZZ	AE		C	GND wire	[GND2]
98	QCNW-7766BHZZ	AE		C	GND wire	[GND4~6,7~9]
99	QCNW-7697BHZZ	AD		C	GND wire	[GND8~5]
100	VCKYPU1HB331K	AA		C	Capacitor (50WV 330pF)	[C24,70~73]
101	RC-KZ1054CCZZ	AB		C	Capacitor (0.1μF)	
102	UBATN6639BHZZ	BC		B	Battery (170MA 2.4V)	
	(Unit)					
901	CPWBN7457BH02	CC	N	E	Main PWB unit	

7 Key I/F PWB unit

NO.	PARTS CODE	PRICE RANK	NEW MARK	PART RANK	DESCRIPTION		ER-A460	ER-A470
1	VRD-RC2EY473J	AA		C	Resistor (1/4W 47KΩ ±5%)	[R1,2,3,4,5,6,7,8,9,10]	○	○
2	VHDDSS133HV-1	AA		B	Diode (DSS133HV)	[D1~22,24]	○	
	VHDDSS133HV-1	AA		B	Diode (DSS133HV)	[D1~22]		○
3	RC-Z1N104BHZZ	AC		C	Capacitor (12WV 0.1μF)	[C1,2,3,4]	○	○
4	RMPTC8473QCKB	AC		B	Block resistor (47KΩ × 8 1/8W ±10%)	[RA1]	○	○
5	VHISN74LS138N	AG		B	IC (SN74LS138N)	[IC1,2]	○	○
6	VHIT74HC153-C	AN		B	IC (74HC153P)	[IC3,4]	○	○
7	QCNCM6865BH1A	AE		C	Connector (Mode S/W) (5267-11A)	[CN2]	○	○
8	QCNW-7748BHZZ	AM		C	Cable (Key I/F~ Display) (10P)	[CN4]	○	○
9	QCNW-7747BHZZ	AM		C	Cable (Key I/F~ Display) (9P)	[CN3]	○	○
10	QCNCW7118BH1H	AM		C	Connector (18pin) (K/B) (5229-18CPB)	[CN5]	○	○
11	QCNCM7118BH0i	AF		C	Connector (9pin) (K/B) (5229-09CPB)	[CN6]	○	○
12	QCNW-7769BHZZ	AE		C	GND wire		○	○
13	QCNCM7168BH0C	AE	N	C	Connector (W-P9003 #50)	[CN1]	○	○
14	QCNCM7169BH0C	AF	N	C	Connector (CLP2503-0101)	[CN8]	○	○
	(Unit)							
901	CPWBF7455BH03	BE	N	E	Key PWB unit (Normal)		○	
	CPWBF7455BH04	BE	N	E	Key PWB unit (Flat)			○

8 Display PWB unit

NO.	PARTS CODE	PRICE RANK	NEW MARK	PART RANK	DESCRIPTION	
1	VRD-RC2EY000J	AA		C	Resistor (1/4W 0Ω ±5%)	[FL1,2]
2	VRD-RC2EY473J	AA		C	Resistor (1/4W 47KΩ ±5%)	[R1,2]
3	VRD-RC2EY472J	AA		C	Resistor (1/4W 4.7KΩ ±5%)	[R3,4]
4	VRD-RC2EY202J	AA		C	Resistor (1/4W 2.0KΩ ±5%)	[R9,10,11,12,13,14,17,18,19,20]
5	VRD-RC2EY330J	AA		C	Resistor (1/4W 33Ω ±5%)	[R5,6,7,8]
6	VRD-RC2EY221J	AA		C	Resistor (1/4W 220Ω ±5%)	[R21]
7	VRD-RC2EY105J	AA		C	Resistor (1/4W 1.0MΩ ±5%)	[R22]
8	VRD-RC2EY273G	AA		C	Resistor (1/4W 27KΩ ±2%)	[R0]
9	VHEMTZJ39C/-1	AB		B	Zener diode (MTZJ39C)	[ZD1]
10	VRD-RC2EY3R3J	AA		C	Resistor (1/4W 3.3Ω ±5%)	[R15,16]
11	VRD-RC2EY222J	AA		C	Resistor (1/4W 2.2KΩ ±5%)	[R24]
12	VRD-RC2EY123J	AA		C	Resistor (1/4W 12KΩ ±5%)	[R23]
13	VHDDSS133HV-1	AA		B	Diode (DSS133HV)	[D2]
14	RC-KZ1054CCZZ	AB		C	Capacitor (50WV 0.1μF)	[C3,4,6,13,21,22]
15	RC-EZ106ARC1A	AD		C	Capacitor (10WV 10μF)	[C8,20]
16	VCCCPU1HH150J	AA		C	Capacitor (50WV 15PF)	[C14,15]
17	VCEAEU1CW106M	AA		C	Capacitor (16WV 10μF)	[C7]
18	VCKYPU1HB102K	AA		C	Capacitor (50WV 1000PF)	[C2,19]
19	VCKYPU1HB471K	AA		C	Capacitor (50WV 470PF)	[C0,1,9,11,12,16,17,18]
20	VCKYPU1HB101K	AA		C	Capacitor (50WV 100PF)	[C23]
21	VCKYPU1HB222K	AA		C	Capacitor (50WV 2200PF)	[C10]
22	VSDSC001-B/CC	AA		B	Transistor (DSC001-B/CC) (2SC3198)	[Q1]

8 Display PWB unit

NO.	PARTS CODE	PRICE RANK	NEW MARK	PART RANK	DESCRIPTION	
23	VHiH4728A91FS	AX		B	IC (H4728A91FS)	[IC1]
24	VHiM66004FP-1	AY		B	IC (M66004FP)	[IC2]
25	RCRSZ6644RCZZ	AD		B	Crystal (4.19MHz)	[X1]
26	RCRSP1003CCZZ	AT		B	Crystal (32KHz)	[X2]
27	RMPTC4104QCKB	AC		B	Block resistor (100KΩ × 4 1/8W ±10%)	[RA3]
28	RMPTC7104QCKB	AC		B	Block resistor (100KΩ × 7 1/4W ±10%)	[RA2]
29	RMPTC8104QCKB	AD		B	Block resistor (100KΩ × 8 1/8W ±10%)	[RA1]
30	RMPTE4471RCHZ	AD		B	Capacitor array (470pF × 4)	[CA1]
31	QCNW-7751BHZZ	AV		C	Cable (DISP-MAIN)	[CN6,7]
32	QCNCM7176BH0H	AD		C	Connector (KEY) (5394-0810)	[CN3]
33	QCNCM7176BH0i	AD		C	Connector (KEY) (53014-0910)	[CN4]
34	QCNCM6865RC0H	AC		C	Connector (Pop up) (5267-08A)	[CN1]
35	QCNCM6865RC1J	AC		C	Connector (10pin)	[CN2]
36	RALMB6646BHZZ	AQ		B	Buzzer	[BZ]
37	VVK22MT03G/-1	BM		B	Display tube	
38	LBNDJ2003SCZZ	AA		C	Cable band (Large)	
	(Unit)					
901	CPWBN7459BH01	BW		E	Display PWB unit	

9 IR PWB unit

NO.	PARTS CODE	PRICE RANK	NEW MARK	PART RANK	DESCRIPTION	
1	VCCCCY1HH101J	AA		C	Capacitor (50WV 100PF)	[C46]
2	VCCCTV1HH200J	AA		C	Capacitor (50WV 20PF)	[C49,61]
3	VCKYCY1HB102K	AA		C	Capacitor (50WV 1000PF)	[C47]
4	VCKYTV1HB103K	AB		C	Capacitor (50WV 0.010μF)	[C44]
5	VCKYCY1HB222K	AA		C	Capacitor (50WV 2200PF)	[C48]
6	VCKYCY1HF104Z	AA		C	Capacitor (50WV 0.10μF)	[C45,50,51,52]
7	VHiiR9393N/-1	AD		B	IC (IR9393N)	[IC1]
8	VRD-RB2HY150J	AA		C	Resistor (1/2W 15Ω ±5%)	[R71]
9	VRS-TS2AD101J	AA		C	Resistor (1/10W 100Ω ±5%)	[R68,69]
10	VRS-TS2AD102J	AA		C	Resistor (1/10W 1.0KΩ ±5%)	[R72]
11	VRS-TS2AD103J	AA		C	Resistor (1/10W 10KΩ ±5%)	[R56,61,62]
12	VRS-TS2AD104J	AA		C	Resistor (1/10W 100KΩ ±5%)	[R51]
13	VRS-TS2AD110J	AA		C	Resistor (1/10W 11Ω ±5%)	[R70]
14	VRS-TS2AD182J	AA		C	Resistor (1/10W 1.8KΩ ±5%)	[R52]
15	VRS-TS2AD223J	AA		C	Resistor (1/10W 22KΩ ±5%)	[R55]
16	VRS-TS2AD332J	AA		C	Resistor (1/10W 3.3KΩ ±5%)	[R50,67]
17	VRS-TS2AD333J	AA		C	Resistor (1/10W 33KΩ ±5%)	[R66,54]
18	VRS-TS2AD363J	AA		C	Resistor (1/10W 36KΩ ±5%)	[R58]
19	VRS-TS2AD393G	AA		C	Resistor (1/10W 39KΩ ±2%)	[R63]
20	VRS-TS2AD393J	AA		C	Resistor (1/10W 39KΩ ±5%)	[R57]
21	VRS-TS2AD432J	AA		C	Resistor (1/10W 4.3KΩ ±5%)	[R60]
22	VRS-TS2AD622J	AA		C	Resistor (1/10W 6.2KΩ ±5%)	[R59]
23	VRS-TS2AD623G	AB		C	Resistor (1/10W 62KΩ ±2%)	[R65]
24	VS2SC4405-/-1	AD		B	Transistor (2SC4405)	[Q3]
25	VSUMX5/////-1	AC		B	Transistor (UMX5)	[Q1,2]
26	VRS-TS2AD821J	AA		C	Resistor (1/10W 820Ω ±5%)	[R64]
27	VRS-TS2AD563J	AA		C	Resistor (1/10W 56KΩ ±5%)	[R53]
28	VHPPD410Pi/-1	AE		B	Photo transistor (PD410PI)	[PD1]
29	VHPSiR320ST3N	AD		B	LED (SIR320ST3N)	[LED1,2]
30	QCNCM7179BH0E	AD		C	Connector (5P) (53015-0510)	[CN1]
31	LHLDZ6835BHZZ	AL		C	LED housing	
32	PSPAG6730BHZZ	AE		C	Photo diode cushion	
33	PSLDM6638BHZZ	AG		C	IR PWB shield case	
34	PSLDM6637BHZZ	AG		C	Photo diode case	
35	RC-EZ106ARC1A	AD		C	Capacitor (10WV 10μF)	[C54]
	(Unit)					
901	CPWBN7460BH01	BB		E	IR PWB unit	

10 Pop-up PWB unit

NO.	PARTS CODE	PRICE RANK	NEW MARK	PART RANK	DESCRIPTION
1	QCNCW7083BH08	AM		C	Connector (8pin) [CN1]
2	QCNCW7083BH10	AP		C	Connector (10pin) [CN2]
3	VVK7MT143G/-1	AX		B	Display tube
4	LBNDJ2003SCZZ	AA		C	Cable band (Large)
	(Unit)				
901	CPWBF7456BH01	BG		E	Pop up PWB unit

11 ROM/RAM PWB unit

NO.	PARTS CODE	PRICE RANK	NEW MARK	PART RANK	DESCRIPTION
1	QCNCM7178BH3D	AM		C	Connector (52044-3410) [CN201]
2	QSOCZ2042SC32	AE		C	IC socket (32pin) [IC101,102]
3	RC-EZ106ARC1A	AD		C	Capacitor (10μ 10V) [C202,204]
4	RC-KZ1054CCZZ	AB		C	Capacitor (0.1μ F 12V) [C201,203]
	(Unit)				
901	CPWBN7458BH01	BK		E	ROM/RAM PWB unit

12 Articles for consumption

NO.	PARTS CODE	PRICE RANK	NEW MARK	PART RANK	DESCRIPTION	ER-A460	ER-A470
1	DPAPR1026CSZZ	AR		S	Roll paper (5 rolls/pack)	○	○
2	PRBN-6644RCZZ	AZ		S	Ink ribbon	○	○
	PSHEK6830BHZZ	AU	N	S	Programing character sheet		○
3	PSHEK6829BHZZ	AR	N	S	Standard character sheet		○
	PSHEK6828BHZZ	AK		S	Blank character sheet		○

13 Service route options & Service tools

NO.	PARTS CODE	PRICE RANK	NEW MARK	PART RANK	DESCRIPTION	ER-A460	ER-A470
1	LKGiM7113RCZZ	AK		S	Service key	○	○
2	GCOVB7108BHZZ	BA	N	S	SW cover	○	○
3	LKGiM7126RCZZ	AL		S	Mode key grip cover	○	○
4	GCOVB7109BHZZ	BF	N	S	Normal key cover	○	
5	DUNT-4945BHZZ	AY		S	Near end senser unit (Include No.101~108)	○	○
6	GCOVB7110BHZA	BE	N	S	Key cover(Programing)	○	
7	CBOXD7136BH01	BU	N	S	Remote drawer box unit	○	○
8	GCOVA7107BHZB	AG	N	S	Clerk cover B (for ER-A5CL)	○	○
9	LANGT7581BHZZ	AM	N	S	Clerk angle (for ER-A5CL)	○	○
10	CKOG-6708RCZZ	BU		S	Expansion PWB	○	○
11	UKOG-6705RCZZ	BC		S	RS232 loop back connector (for ER-A5RS)	○	○
12	UKOG-6634RCZZ	AX		S	Key top remover	○	○
101	QSW-M6887BHZZ	AV		B	END switch	○	○
102	LPLTM6690BHZZ	AF		C	End S/W holder	○	○
103	MLEVF6706BHZZ	AF		C	End S/W lever	○	○
104	MSPRC6736RCZZ	AC		C	Sensor spring	○	○
105	LANGK7547BHZZ	AL		C	N/F angle	○	○
106	XBPSD20P08000	AA		C	Screw (M2 × 8)	○	○
107	XBPSD40P04000	AA		C	Screw (M4 × 4)	○	○
108	QCNW-7774BHZZ	AE		C	End SW cable		

Index

PARTS CODE	NO.	PRICE RANK	NEW MARK	PART RANK	
【C】					
CBŌXD7136BH01	4-901	BU	N	E	
CCABM7172BHZZ	4- 2	BN		D	
CCABM7218BH04	4- 2	BG	N	D	
CCAS-6678BH01	4-501	BF		E	
CFRM-6682BH02	4-504	AQ		E	
CFRM-6682BH03	4-504	AV	N	E	
CFRM-6683BH01	4- 16	AW		C	
CLŌK-6683BHZB	4-503	BK		E	
CLŌK-6683BHZC	4-503	BF		E	
CPLU-6641BH02	4- 15	BD		B	
CPWBF7455BH03	1- 27	BE	N	E	
CPWBF7455BH04	2- 27	BE	N	E	
CPWBF7456BH01	1- 6	BG		E	
〃	2- 6	BG		E	
〃	10-901	BG		E	
CPWBN7457BH02	3- 14	CC	N	E	
〃	6-901	CC	N	E	
CPWBN7458BH01	3- 15	BK		E	
〃	11-901	BK		E	
CPWBN7459BH01	1- 20	BW		E	
〃	2- 20	BW		E	
〃	8-901	BW		E	
CPWBN7460BH01	1- 4	BB		E	
〃	2- 4	BB		E	
〃	9-901	BB		E	
CSHEP6833BH01	1- 45	BA		C	
【D】					
DUNT-1306BHZZ	4- 42	AX		E	
DUNT-1817BHZZ	1- 15	AY		E	
〃	2- 15	AY		E	
DUNTK4938RCZZ	2- 41	BE		E	
DUNTK4939BHZZ	1-501	BR	N	E	
【G】					
GBŌXD7134BHZA	4-901	BU	N	E	
GCAB-7215BHZZ	1- 2	AR		D	
〃	2- 2	AR		D	
GCABA7216BHZA	3- 19	BH	N	D	
GCABB7214BHZZ	2- 9	BC		D	
GCABB7217BHZZ	1- 9	BC		D	
GCAS-6678BHZZ	4- 12	BC		D	
GCŌVA7036BHZZ	4- 32	AS		D	
GCŌVA7100BHZZ	1- 13	AY		D	
〃	2- 13	AY		D	
GCŌVA7103BHZZ	1- 16	AT		D	
〃	2- 16	AT		D	
GCŌVA7104BHZZ	3- 23	AV		D	
GCŌVA7105BHZZ	3- 17	AU		D	
GCŌVA7107BHZA	3- 18	AL		D	
GCŌVB7101BHZZ	2- 36	BF		D	
GCŌVB7102BHZZ	2- 40	BA		D	
GCŌVH7106BHZZ	3- 25	AU		D	
GDRW-6678BHZA	4-502	BG		E	
GDRW-6678BHZZ	4- 31	BF		C	
【H】					
HPNLC6826BHZZ	2- 10	AP	N	D	
HPNLC6828BHZZ	1- 10	AP	N	D	
【J】					
JKNBZ6896BHZZ	1- 40	AG		C	
JKNBZ6897BHZZ	1- 39	AG		C	
JKNBZ6898BHZZ	1- 37	AH		C	
JKNBZ6899BHZZ	1- 36	AH		C	
JKNBZ6907BHZZ	1- 38	AK		C	
JKNBZ6908BHZZ	1- 38	AK		C	
JKNBZ6909BHZZ	1- 38	AK		C	
JKNBZ6910BHZZ	1- 38	AL		C	
JKNBZ6911BHZZ	1- 38	AK		C	
JKNBZ6912BHZZ	1- 38	AK		C	
JKNBZ6913BHZZ	1- 38	AK		C	
JKNBZ6914BHZZ	1- 38	AK		C	
JKNBZ6915BHZZ	1- 38	AK		C	
JKNBZ6916BHZZ	1- 38	AK		C	
JKNBZ6917BHZZ	1- 38	AK		C	
JKNBZ6918BHZZ	1- 38	AK		C	
JKNBZ6919BHZZ	1- 38	AK		C	
JKNBZ6920BHZZ	1- 38	AK		C	
【K】					
Ki-ŌB6778RCZZ	3- 11	BY		E	
【L】					
LANGT7582BHZZ	1- 31	AL		C	

PARTS CODE	NO.	PRICE RANK	NEW MARK	PART RANK	
LANGT7582BHZZ	2- 31	AL		C	
LANGT7583BHZZ	1- 19	AS		C	
〃	2- 19	AS		C	
LBNDJ2003SCZZ	1- 5	AA		C	
〃	2- 5	AA		C	
〃	3- 4	AA		C	
〃	8- 38	AA		C	
〃	10- 4	AA		C	
LBNDJ2004BHZZ	3- 35	AB		C	
LBNDJ6636BHZZ	3- 28	AD		C	
LBRC-6663BHZZ	4- 6	AQ		C	
LCHSM6704BHZZ	3- 36	AY	N	C	
LFRM-6682BHZZ	4- 22	AN		C	
LFRM-6697BHZZ	1- 42	BA		C	
LHLDQ6839BHZZ	3- 39	AL	N	C	
LHLDW0006SCZZ	3- 8	AB		C	
LHLDW0008SCZZ	1- 17	AA		C	
〃	2- 17	AA		C	
〃	3- 32	AA		C	
LHLDW4081CCZZ	4- 48	AC		C	
LHLDW6820BHZZ	1- 24	AE		C	
〃	2- 24	AE		C	
LHLDW6821BHZZ	1- 25	AD		C	
〃	2- 25	AD		C	
〃	3- 33	AD		C	
LHLDZ6835BHZZ	9- 31	AL		C	
LHLDZ6836BHZZ	1- 50	AE		C	
LHLDZ6837BHZZ	1- 51	AE		C	
LHLDZ6838BHZZ	2- 42	AD		C	
LKGiM7110BHZZ	1- 28	AE		B	
〃	2- 28	AE		B	
LKGiM7111BHZZ	1- 28	AE		B	
〃	2- 28	AE		B	
LKGiM7129BHZZ	1- 28	AE		B	
〃	2- 28	AE		B	
LKGiM7331BHZZ	4- 35	AE		B	
LKGiM7356BHZZ	1- 14	AK		B	
〃	2- 14	AK		B	
LKGiW0001BHZZ	1- 29	AS		B	
〃	2- 29	AS		B	
LKGiW7330BHZZ	4- 33	AY		B	
LPLTM6674BHZA	4- 37	AX	N	D	
LPLTM6674BHZC	4- 37	AY		D	
LPLTM6698BHZZ	1- 44	AV		C	
LPLTP6697BHZZ	3- 20	AP		C	
LX-BZ1085CCZZ	3- 21	AA		C	
LX-BZ6644BHZZ	6- 72	AA		C	
LX-BZ6775BHZZ	4- 17	AA		C	
LX-BZ6776BHZZ	4- 13	AA		C	
LX-BZ6782BHZZ	1- 21	AA		C	
〃	2- 21	AA		C	
〃	3- 24	AA		C	
【M】					
MCAMM6633BHZZ	4- 21	AG		C	
MLEVF6695BHZZ	4- 8	AK		C	
MSPRB6711BHZZ	4- 40	AD		C	
MSPRC6712BHZZ	4- 27	AF		C	
MSPRC6715BHZZ	4- 46	AE		C	
MSPRK6718BHZZ	4- 36	AF		C	
MSPRT6713BHZZ	4- 18	AD		C	
MSPRT6714BHZZ	4- 7	AE		C	
【N】					
NRŌLP6650BHZZ	4- 4	AP		C	
〃	4- 28	AP		C	
NSFTM6650BHZZ	4- 45	AD		C	
【P】					
PFiLW6942BHZZ	1- 1	AQ		D	
〃	2- 1	AQ		D	
PFiLW6943BHZZ	1- 3	AS	N	D	
〃	2- 3	AS	N	D	
PFiLW6950BHZZ	1- 7	AW	N	D	
〃	2- 7	AW	N	D	
PFiLW6951BHZZ	1- 12	AS		C	
〃	2- 12	AS		C	
PGUMM6695BHZZ	4- 3	AE		D	
PGUMM6696BHZZ	4- 25	AE		D	
PGUMM6699RCZZ	3- 13	AB		C	
PGUMM6724BHZZ	1- 43	AY		C	
PRDAF6654BHZZ	6- 70	AM		C	
PRDAF6656BHZZ	6- 85	AK		C	

PARTS CODE	NO.	PRICE RANK	NEW MARK	PART RANK	
PRNGT6637BHZZ	4- 34	AA		C	
PRNGT6639BHZZ	1- 34	AB		C	
〃	2- 34	AB		C	
PSHEK6828BHZZ	2- 39	AK		D	
PSHEK6829BHZZ	2- 37	AR	N	D	
PSHEK6830BHZZ	2- 38	AU	N	D	
PSHEP6839BHZZ	1- 46	AC		C	
〃	2- 46	AC		C	
PSHEP6840BHZZ	2- 43	AE		C	
PSKR-6628BHZZ	4- 11	AG		C	
PSKR-6629BHZZ	4- 9	AL		C	
PSLDM6637BHZZ	1- 52	AG		C	
〃	2- 47	AG		C	
〃	9- 34	AG		C	
PSLDM6638BHZZ	1- 54	AG		C	
〃	2- 49	AG		C	
〃	9- 33	AG		C	
PSPAG6730BHZZ	1- 53	AE		C	
〃	2- 48	AE		C	
〃	9- 32	AE		C	
PSTM-6793RCZZ	3- 40	AU	N	C	
PSTM-6798RCZZ	3- 40	AV	N	C	
【Q】					
QACCE3120QCN5	3- 1	AL		B	
QACCL1018CCN1	3- 1	AV		B	
QCNCM1101CCZZ	6- 83	AB		C	
QCNCM5278NCZZ	6- 84	AC		B	
QCNCM6865RC0B	6- 86	AA		B	
QCNCM6865RC0H	8- 34	AC		C	
QCNCM6865RC1J	8- 35	AC		C	
QCNCM7073RC6H	6- 87	AM		C	
QCNCM7176BH0E	6- 90	AC		C	
QCNCM7176BH0G	6- 88	AD		C	
QCNCM7176BH0H	8- 32	AD		C	
QCNCM7176BH0i	8- 33	AD		C	
QCNCM7176BH1J	6- 89	AD		C	
QCNCM7178BH3D	11- 1	AM		C	
QCNCM7178BH3F	6- 91	AL		C	
QCNCM7179BH0E	9- 30	AD		C	
QCNCW7083BH08	10- 1	AM		C	
QCNCW7083BH10	10- 2	AP		C	
QCNW-1035CCZZ	3- 1	AL		B	
QCNW-7632BHZZ	4- 50	AQ		C	
QCNW-7697BHZZ	6- 99	AD		C	
QCNW-7749BHZZ	3- 16	AP		C	
QCNW-7750BHZZ	6- 92	BA		C	
QCNW-7751BHZZ	8- 31	AV		C	
QCNW-7752BHZZ	3- 30	AH		C	
QCNW-7753BHZZ	1- 33	AP		C	
〃	2- 33	AP		C	
QCNW-7754BHZZ	1- 30	AP		C	
〃	2- 30	AP		C	
QCNW-7764BHZZ	3- 10	AK		C	
QCNW-7765BHZZ	6- 97	AE		C	
QCNW-7766BHZZ	6- 98	AE		C	
QCNW-7768BHZZ	3- 5	AE		C	
QCNW-7770BHZZ	1- 48	AE		C	
〃	2- 45	AE		C	
QCNW-7771BHZZ	1- 47	AF		C	
〃	2- 44	AF		C	
QFS-C2521TAZZ	6- 78	AE		A	
QFS-C4301CCZZ	6- 79	AE		A	
QFSHD2109AFZZ	6- 56	AC		C	
QPLGA0006QCZZ	3- 1	AQ		C	
QSOCZ2042SC32	6- 67	AE		C	
〃	11- 2	AE		C	
QSW-M6872BHZZ	4- 14	AR		B	
【R】					
RALMB6646BHZZ	8- 36	AQ		B	
RALML6647BHZZ	4- 43	AR		B	
RC-EZ106ARC1A	6- 47	AD		C	
〃	8- 15	AD		C	
〃	9- 35	AD		C	
〃	11- 3	AD		C	
RC-EZ476ARC1A	6- 48	AF		C	
RC-KZ1054CCZZ	6- 46	AB		C	
〃	6-101	AB		C	
〃	8- 14	AB		C	
〃	11- 4	AB		C	
RCiLC6653BHZZ	6- 81	AS		C	

PARTS CODE	NO.	PRICE RANK	NEW MARK	PART RANK	
RCORF6671BHZZ	6- 34	AK		C	
RCORF6696BHZZ	3- 41	AL	N	C	
RCORF6698BHZZ	4- 54	AR		C	
RCORF6699BHZZ	1- 23	AU		C	
〃	2- 23	AU		C	
〃	3- 27	AU		C	
〃	4- 55	AU		C	
RCORF6700BHZZ	3- 34	AS		C	
RCRSP1003CCZZ	8- 26	AT		B	
RCRSZ6644RCZZ	8- 25	AD		B	
RCRSZ6674RCZZ	6- 82	AG		B	
RMPTC4104QCKB	8- 27	AC		B	
RMPTC6103QCKB	6- 63	AC		B	
RMPTC7104QCKB	8- 28	AC		B	
RMPTC8102QCKB	6- 62	AD		B	
RMPTC8103QCKB	6- 61	AD		B	
RMPTC8104QCKB	8- 29	AD		B	
RMPTE4471RCHZ	8- 30	AD		B	
RPLU-6639BHZZ	4- 15	AZ		B	
RTRNH6882RCZZ	6- 80	AM		B	
RTRNP6880BHZZ	3- 3	BE	N	B	
RTRNP6881BHZZ	3- 3	BE	N	B	
RVR-M2517BHZZ	6- 60	AL		B	
【S】					
SPAKA8255BHZZ	4- 38	AC		D	
SSAKA5004CCZZ	4- 10	AA		D	
〃	4- 56	AA		D	
SSAKH3012CCZZ	4- 52	AA		D	
【T】					
TCAUS6677BHZZ	3- 31	AD		D	
TLABH7001BHZZ	1-101	AV	N	D	
【U】					
UBATN6639BHZZ	6-102	BC		B	
【V】					
VCCCCY1HH101J	9- 1	AA		C	
VCCCPU1HH150J	8- 16	AA		C	
VCCCTV1HH200J	9- 2	AA		C	
VCCSPU1HL470J	6- 59	AA		C	
VCEAEU1CW106M	8- 17	AA		C	
VCEAGA1CW107M	6- 42	AC		C	
VCEAGA1CW337M	6- 41	AB		C	
VCEAGA1CW477M	6- 40	AB		C	
VCEAGA1HW105M	6- 45	AB		C	
VCEAGA1HW106M	6- 43	AA		C	
VCEAGA1HW107M	6- 39	AA		C	
VCEAGA1HW228M	6- 76	AB		C	
VCEAGA1HW335M	6- 44	AB		C	
VCEAGA1HW476M	6- 57	AB		C	
VCEAGU1HW478M	6- 77	AL		C	
VCKYCY1HB102K	9- 3	AA		C	
VCKYCY1HB222K	9- 5	AA		C	
VCKYCY1HF104Z	9- 6	AA		C	
VCKYPU1HB101K	6- 52	AA		C	
〃	8- 20	AA		C	
VCKYPU1HB102K	6- 49	AA		C	
〃	8- 18	AA		C	
VCKYPU1HB222K	8- 21	AA		C	
VCKYPU1HB331K	6- 51	AA		C	
〃	6- 96	AA		C	
〃	6-100	AA		C	
VCKYPU1HB332K	6- 58	AA		C	
VCKYPU1HB471K	6- 53	AA		C	
〃	8- 19	AA		C	
VCKYTV1HB103K	9- 4	AB		C	
VCQYNA1HM103K	6- 50	AA		C	
VCQYNA1HM224K	6- 94	AC		C	
VCQYNA1HM333K	6- 54	AA		C	
VCQYNU1HM104K	6- 55	AB		C	
VHDCP301///-1	6- 74	AL		B	
VHDDSS133HV-1	6- 27	AA		B	
〃	8- 13	AA		B	
VHDEU1Z////-1	6- 28	AB		B	
VHD1N4002G/-1	6- 29	AA		B	
VHEE102////-1	6- 33	AC		B	
VHEMTZJ39C/-1	8- 9	AB		B	
VHEMTZ5.1A/-1	6- 32	AC		B	
VHEMTZ5.6A/-1	6- 31	AA		B	
VHERD4.3EL1-1	6- 73	AA		B	
VHERD6.2EB2-1	6- 30	AB		B	
VHiHM62256L15	6- 66	BR		B	

PARTS CODE	NO.	PRICE RANK	NEW MARK	PART RANK	
VHiH4728A91FS	8- 23	AX		B	
VHiH641510810	6- 3	BA		B	
VHiiR9393N/-1	6- 1	AD		B	
〃	9- 7	AD		B	
VHiLZ9AH30/-1	6- 4	BA		B	
VHiM54567P/-1	6- 69	AK		B	
VHiM66004FP-1	8- 24	AY		B	
VHiSN74HC00NS	6- 2	AC		B	
VHiSTA401A/-1	6- 68	AP		B	
VHiSTR2024/-1	6- 65	AR		B	
VHi27020RAU1A	6- 64	BD	N	B	
VHPPD410Pi/-1	9- 28	AE		B	
VHPSiR320ST3N	9- 29	AD		B	
VRD-RB2HY150J	9- 8	AA		C	
VRD-RC2EY000J	6- 36	AA		C	
〃	8- 1	AA		C	
VRD-RC2EY102J	6- 6	AA		C	
VRD-RC2EY103J	6- 5	AA		C	
〃	6- 95	AA		C	
VRD-RC2EY105J	8- 7	AA		C	
VRD-RC2EY123J	8- 12	AA		C	
VRD-RC2EY153G	6- 16	AA		C	
VRD-RC2EY202J	6- 10	AA		C	
〃	8- 4	AA		C	
VRD-RC2EY221J	6- 8	AA		C	
〃	8- 6	AA		C	
VRD-RC2EY222J	6- 14	AA		C	
〃	8- 11	AA		C	
VRD-RC2EY223J	6- 22	AA		C	
VRD-RC2EY272J	6- 17	AA		C	
VRD-RC2EY273G	8- 8	AA		C	
VRD-RC2EY273J	6- 26	AA		C	
VRD-RC2EY3R3J	8- 10	AA		C	
VRD-RC2EY330J	6- 25	AA		C	
〃	8- 5	AA		C	
VRD-RC2EY331J	6- 9	AA		C	
VRD-RC2EY332J	6- 11	AA		C	
VRD-RC2EY470J	6- 35	AA		C	
VRD-RC2EY472J	6- 20	AA		C	
〃	8- 3	AA		C	
VRD-RC2EY473J	6- 7	AA		C	
〃	8- 2	AA		C	
VRD-RC2EY562J	6- 21	AA		C	
VRD-RC2EY563J	6- 19	AA		C	
VRD-RC2EY623J	6- 13	AA		C	
VRD-RC2EY822G	6- 15	AA		C	
VRD-RC2EY912G	6- 18	AA		C	
VRNRC2EK1002F	6- 23	AA		C	
VRNRC2EK1201F	6- 24	AA		C	
VRNRC2EK1303F	6- 12	AA		C	
VRS-TS2AD101J	9- 9	AA		C	
VRS-TS2AD102J	9- 10	AA		C	
VRS-TS2AD103J	9- 11	AA		C	
VRS-TS2AD104J	9- 12	AA		C	
VRS-TS2AD110J	9- 13	AA		C	
VRS-TS2AD182J	9- 14	AA		C	
VRS-TS2AD223J	9- 15	AA		C	
VRS-TS2AD332J	9- 16	AA		C	
VRS-TS2AD333J	9- 17	AA		C	
VRS-TS2AD363J	9- 18	AA		C	
VRS-TS2AD393G	9- 19	AA		C	
VRS-TS2AD393J	9- 20	AA		C	
VRS-TS2AD432J	9- 21	AA		C	
VRS-TS2AD563J	9- 27	AA		C	
VRS-TS2AD622J	9- 22	AA		C	
VRS-TS2AD623G	9- 23	AB		C	
VRS-TS2AD821J	9- 26	AA		C	
VSDSC001-B/-1	6- 37	AA		B	
VSDSC001-B/CC	8- 22	AA		B	
VSUMX5/////-1	9- 25	AC		B	
VS2SA673-//-1	6- 38	AD		B	
VS2SC4153-/-1	6- 75	AG		B	
VS2SC4405-/-1	9- 24	AD		B	
VVK22MT03G/-1	8- 37	BM		B	
VVK7MT143G/-1	10- 3	AX		B	
【X】					
XBBSC30P06000	1- 8	AA		C	
〃	2- 8	AA		C	
XBBSC30P20000	3- 22	AA		C	
XBPSD30P06000	6- 93	AA		C	

PARTS CODE	NO.	PRICE RANK	NEW MARK	PART RANK	
XBPSD30P10000	6- 71	AA		C	
XBPSD40P06K00	4- 44	AA		C	
XBPSD40P06000	4- 47	AA		C	
XEBSD30P06000	1- 26	AA		C	
XEBSD30P08000	1- 18	AA		C	
〃	2- 18	AA		C	
〃	3- 7	AA		C	
XEBSD30P10000	1- 49	AA		C	
XHBSD30P12000	4- 26	AA		C	
XHBSD40P15000	4- 39	AA		C	
XHPSC30P08000	4- 41	AA		C	
〃	4- 49	AA		C	
XHPSD26P08000	2- 26	AA		C	
XHPSD30P06K00	1- 11	AA		C	
〃	2- 11	AA		C	
〃	3- 6	AA		C	
XHPSD30P06000	3- 9	AA		C	
XHPSD40P08KS0	3- 37	AA		C	
XJBSD30P10000	1- 22	AA		C	
〃	2- 22	AA		C	
〃	3- 38	AA		C	
XJPSD30P12X00	3- 12	AB		C	
XNESD40-32000	4- 24	AA		C	
XNESD60-50000	4- 29	AA		C	
XRESJ50-06000	4- 20	AA		C	
XUBSD30P08000	4- 5	AA		C	
〃	4- 53	AA		C	
XUBSD40P08000	3- 2	AA		C	
XUPSD23P08000	1- 32	AA		C	
〃	2- 32	AA		C	
XUPSD40P12000	3- 26	AA		C	
XWSSD40-10000	4- 23	AA		C	
XWSSD60-15000	4- 30	AA		C	

SHARP

COPYRIGHT © 1995 BY SHARP CORPORATION
All rights reserved.
Printed in Japan.
No part of this publication may be reproduced,
stored in a retrieval system, or transmitted,
in any form or by any means,
electronic, mechanical, photocopying, recording, or otherwise,
without prior written permission of the publisher.

SHARP CORPORATION
Information Systems Group
Quality & Reliability Control Center
Yamatokoriyama, Nara 639-11, Japan
1995 November Printed in Japan Ⓢ

SHARP INSTALLATION MANUAL

CODE: 00ZERA460VIME

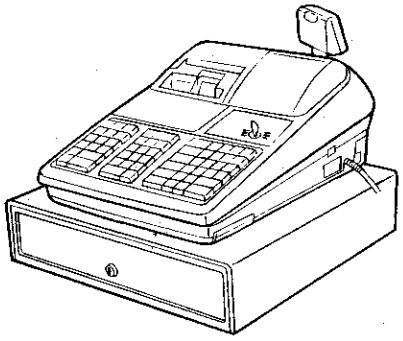

ER-A460

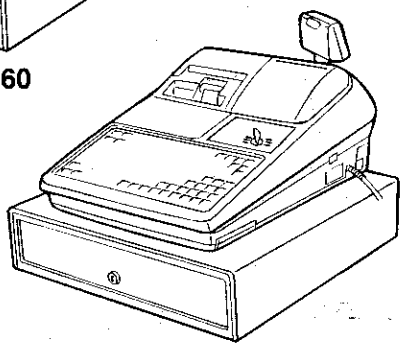

ER-A470

ELECTRONIC CASH REGISTER

ER-A460
MODEL ER-A470

SRV Key : LKGIM7113RCZZ
PRINTER: DP-730
(For "V" version)

CAUTION
EXTREME CAUTION MUST BE TAKEN WHEN SERVICING THIS MACHINE. EVEN THOUGH THE MODE SWITCH IS IN THE OFF POSITION, VOLTAGE IS STILL SUPPLIED TO THE ENTIRE MACHINE.
WHEN WORKING ON THIS MACHINE MAKE SURE THAT THE POWER CORD IS REMOVED FROM THE WALL OUTLET.

CONTENTS

CHAPTER 1. GENERAL 1
CHAPTER 2. LIST OF OPTIONS 2
CHAPTER 3. REMOVING THE TOP CABINET 3
CHAPTER 4. REMOVING THE LOWER CABINET 4
CHAPTER 5. EXPANSION RAM CHIP and CONTROL ROM (ER-01RA, ER-02RA) 5
CHAPTER 6. RS232 I/F (ER-A5RS) 7
CHAPTER 7. REMOTE DRAWER (CBOXD7136BH01) 9
CHAPTER 8. DRAWER FIXING KIT (DIT-8633RCZZ) 11
CHAPTER 9. ONE HOLE CLERK KEY (ER-A5CL) 12
CHAPTER 10. JOURNAL NEAR END SENSOR (DUNT-4945BHZZ) 13
CHAPTER 11. KEY TOP KIT (For ER-A460 only: ER-11KT7/12KT7/22KT7/11DK7/51DK7) 14

Parts marked with "⚠" is important for maintaining the safety of the set. Be sure to replace these parts with specified ones for maintaining the safety and performance of the set.

SHARP CORPORATION

This document has been published to be used for after sales service only.
The contents are subject to change without notice.

CHAPTER 1. GENERAL

This manual describes the installation and operational test procedures for the Model ER-A460/A470 system ECR options.
Be sure to read the "BEFORE INSTALLING OPTIONS" prior to installing any option.
Descriptions of the specifications of the ECR and options subject to change.

Note: This manual describes only options whose installing procedures need to be explained.

* BERORE INSTALLING OPTIONS

1. If you install any options in an ER-A460/A470 register already in use, you must reset the totals. Please notify its user before performing the installation.
   If the register is not reset, sales data stored in the register may be destroyed due to possible incorrect installation.
2. Print out the SRV-mode and PGM2-mode programs before installing any option. It may be necessary to modify each program after installation. These printouts are needed for this modification.
3. If you install the option PWBs (ER-A5RS), option control ROM (ER-A46R1) and expansion RAM chip in the ER-A460/A470 register already in use, perform data saving for memory protection by using the IR interface in advance.
4. As a safety measure, be sure to turn the mode switch to the OFF position and unplug the register before installing any option.
5. The ER-A460/A470 is equipped with various SRV-mode functions to aid you in installing the options. Never enter any job numbers other than those shown in each of the following sections, so that data stored is not destroyed.
6. After installing any options, start the ER-A460/A470 register by performing the service reset or the master reset.

Service reset
1) Turn the mode switch to the SRV' position to turn on the power.
2) Turn the mode switch to the SRV position.

Sample printout
PRG. RESET ***

Master reset
1) Turn the mode switch to the SRV' position to turn on the power.
2) Turn the mode switch to the SRV position, holding down the journal feed key.

Sample printout
MASTER. RESET ***

CHAPTER 2. LIST OF OPTIONS

1. Options

NO	NAME	MODEL	DESCRIPTION
1	ONE HOLE CASHIER KEY	ER-A5CL	
2	EXPANSION RAM CHIP	ER-01RA	32K bytes RAM chip
		ER-02RA	128K bytes RAM chip
3	ON-LINE SYSTEM	ER-A5RS	2ports RS-232 I/F
4	CONTROL ROM	ER-A46R1	Control for ER-A5RS
5	PRESETS LOADER	ER-01FD/02FD	FD unit
6	KEY TOP KIT (For ER-A460)	ER-11KT7	1 × 1 key top
		ER-12KT7	1 × 2 key top
		ER-22KT7	2 × 2 key top
		ER-11DK7	1 × 1 dummy key
		ER-51DK7	5 × 1 dummy key
7	TEXT PRESET KEYBOARD	ER-01RK	IR I/F text preset keyboard
8	WIRELESS INTERFACE	CE-iR2/iR4	For IR communication
9	COIN CASE	ER-48CC2	
10	COIN CASE COVER	ER-01CV1~CV5	

2. Service options

NO.	NAME	PARTS CODE	PRICE RANK	DESCRIPTION	ER-A460	ER-A470
1	SERVICE KEY	LKGiM7113RCZZ	AK	For the mode switch	○	○
2	DRIP-PROOF SWITCH COVER	GCÕVB7108BHZZ	BA		○	○
3	MODE KEY GRIP COVER	LKGiM7126RCZZ	AL	OP key only	○	○
4	DRIP-PROOF KEYBOARD COVER	GCÕVB7109BHZZ	BF		○	×
5	JOURNAL NEAR END SENSOR	DUNT-4945BHZZ	AY		○	○
6	PROGRAMMING CHARACTER KEYBOARD COVER	GCÕVB7110BHZA	BE		○	×
7	REMOTE DRAWER	CBÕXD7136BH01	BU		○	○
8*	CLERK COVER "B"	GCÕVA7107BHZB	AG	For ER-A5CL	○	○
	CLERK ANGLE	LANGT7581BHZZ	AM		○	○
	SCREW	XUSSD26P08000	AA		○	○

* From 1995 September production, part No.8 is packed together with ER-A5CL.

3. Service tools

NO.	NAME	PARTS CODE	PRICE RANK
1	EXPANSION PWB	CKÕG-6708RCZZ	BU
2	RS-232 LOOP BACK CONNECTOR FOR ER-A5RS	UKÕG-6705RCZZ	BU
3	KEY TOP REMOVER	UKÕG-6634RCZZ	AX

4. Supplies

NO.	NAME	PARTS CODE	PRICE RANK	DESCRIPTION
1	ROLL PAPER	DPAPR1006CSZZ	AR	5rolls/pack
2	INK RIBBON	PRBN-6644RCZZ	AZ	
3	INK FOR STAMP	UiNK-1001CCZZ	AK	5 cc
4	KEY SHEET (For ER-A470)	PSHEK6830BHZZ	AU	Programming character sheet
		PSHEK6829BHZZ	AR	Standard character sheet
		PSHEK6828BHZZ	AK	Blank character sheet

CHAPTER 3. REMOVING THE TOP CABINET

1. Removing the top cabinet

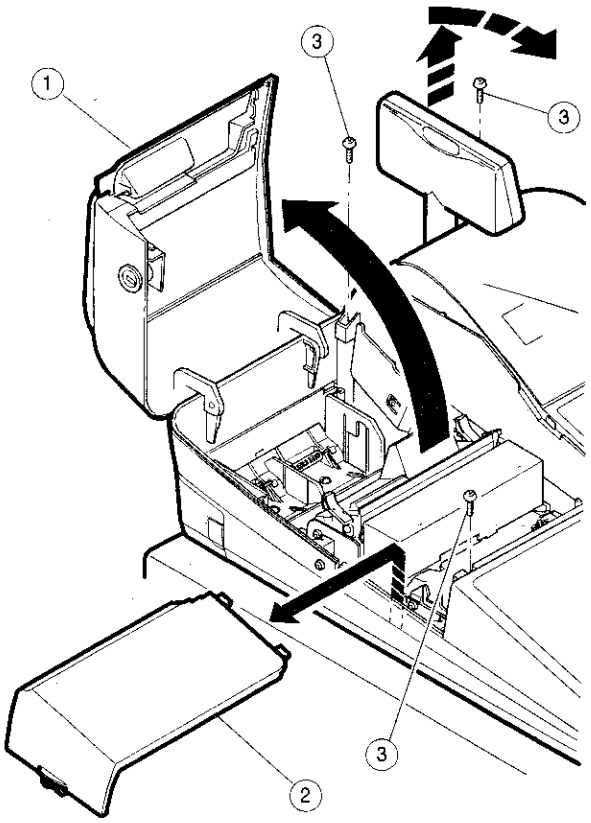

Fig. 1

1) Open the printer cover ①.
2) Remove the ribbon cover ②.
   Lift the left end of the ribbon cover and slide it to the left.
3) Lift the pop-up display and rotate as illustrated above.
4) Remove the three screws ③ suited on the lower cabinet.
5) Slightly lift and slide the top cabinet, and remove grounding wire ④. Grounding wire ④ is connected between the keyboard and the drawer. When disconnecting the grounding wire, disconnect either the drawer side or the keyboard side of the grounding wire.

   Note: Do not pull up the top cabinet until the grounding wire and the connector cables from the top cabinet are removed.

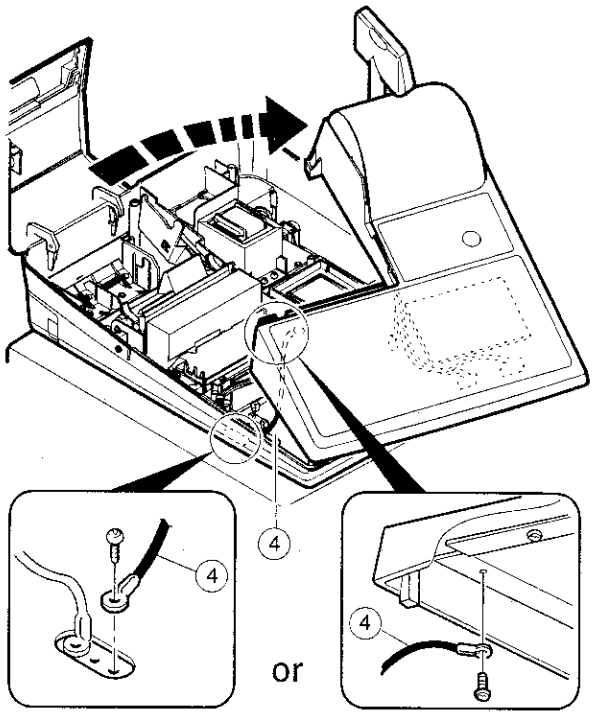

Fig. 2

6) Remove connector cables ⑤, ⑥ and ⑦ from the top cabinet.

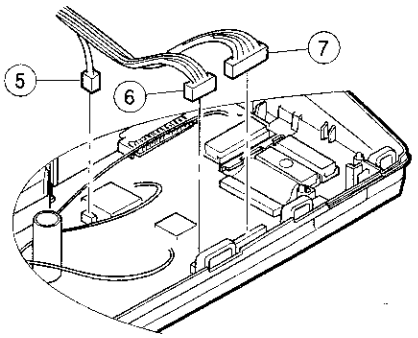

Fig. 3

7) Remove the top cabinet from the lower cabinet.

2. Replacing the top cabinet

Install the top cabinet in the reverse order of removing. Before installing, make sure that each connector is connected securely and that the grounding wire is secured.

CHAPTER 4. REMOVING THE LOWER CABINET

1. Removing the lower cabinet.

1) Open the printer cover.

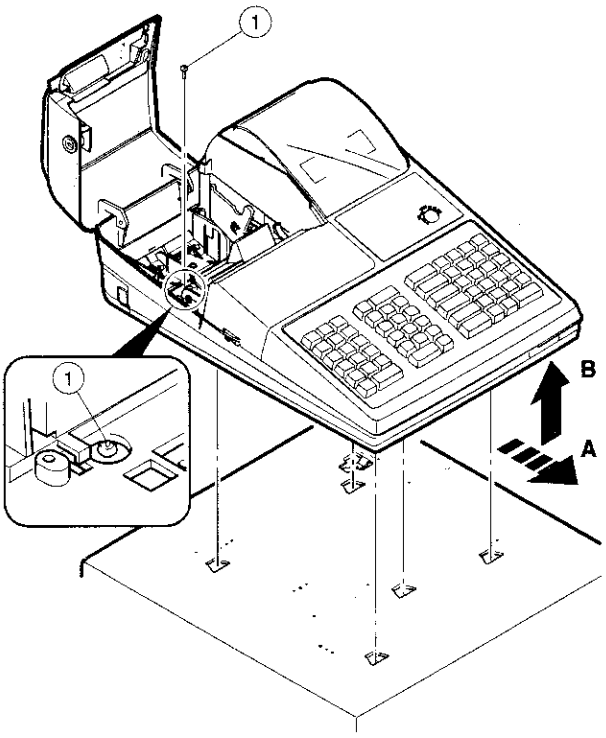

Fig. 1

2) Remove the fixing screw ① of the lower cabinet.

3) Slide the main unit in the direction of the arrow A and lift it in the direction of the arrow B.

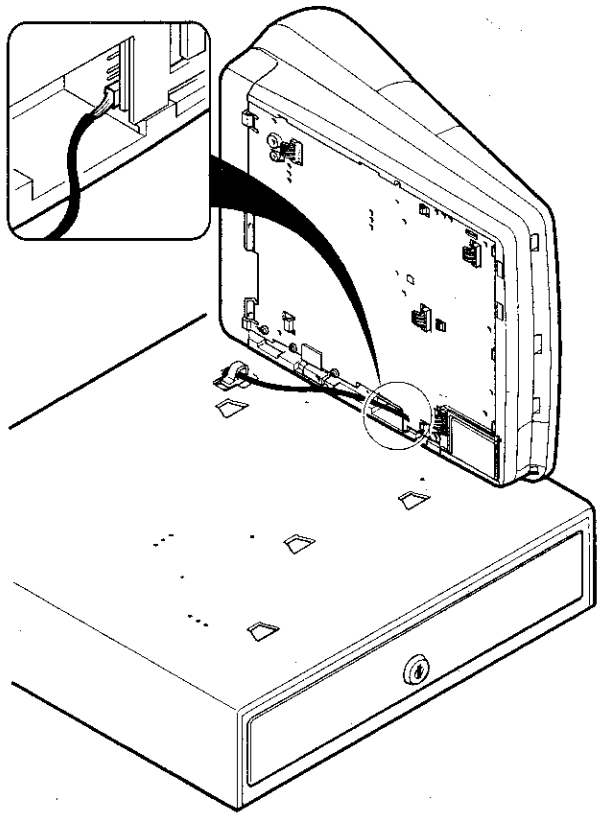

Fig. 2

4) Stand the main drawer sideways as illustrated above, and disconnect the drawer connector.

2. Replacing the main drawer

Install the main drawer in the reverse order of removing. Before installing, make sure that the connector is securely fastened.

CHAPTER 5. EXPANSION RAM CHIP (ER-01RA, ER-02RA) AND CONTROL ROM (ER-A46R1)

1. Outline

The following expansion RAM chips are available for the ER-A460/A470.

ER-01RA: 32KB SRAM chip

ER-02RA: 128KB SRAM chip

The ER-A46R1 is the control ROM used for the following options of the ER-A460/A470.
The control ROM (ER-A46R1) must be installed when any of the following options is used.

ER-A5RS: RS232 I/F

2. Installation procedure

Before working on the installation, turn off the power switch on the ECR and unplug the AC cord from the AC outlet.
Also save the memory contents via the serial interface before proceeding to the installation work.

① ER-01RA and ER-02RA

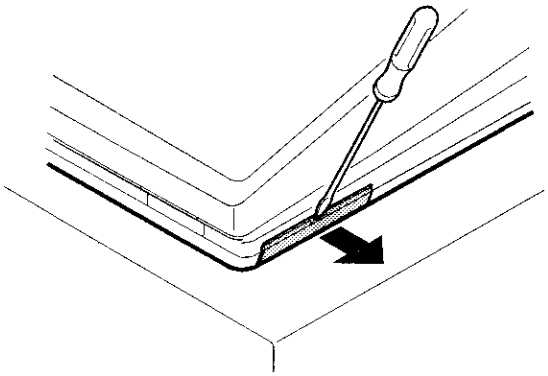

Fig. 1

1) Insert a screwdriver into the slit on the right side of the lower cabinet to remove the option ROM/RAM case.

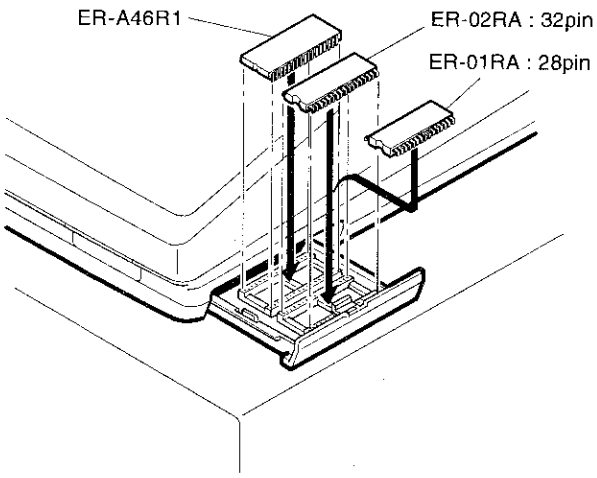

Fig. 2

2) Expansion RAM chip (ER-01RA, ER-02RA)

① Install to the IC socket on the option ROM/RAM PWB. (Location No. RAM2)

Note: The number of pins are different between the ER-01RA (28 pins) and the ER-02RA (32 pins). Observe the correct position for insertion of the chip. (Fig.1, 2)

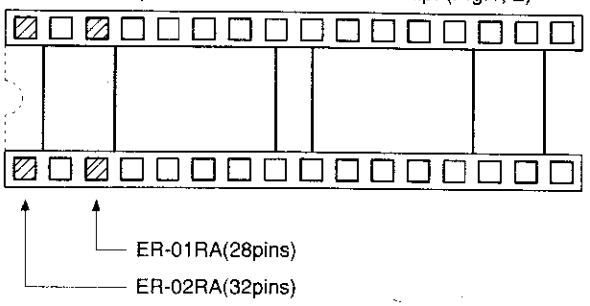

Fig. 3

3) Control ROM (ER-A46R1)

① Install to the IC socket on the option ROM/RAM PWB. (Location No. ROM2)

4) Master reset the ECR.

5) Load the data in memory which had been saved.

6) Program reset the ECR.

3. Operation test

1) Option RAM test

① Key operation
200 → [TL]

JOB #NO.	RAM NO.	Memory to be checked	Address area to be checked
200	Option RAM (main)	ER-02RA	1E0000H ~ 1FFFFFH
		ER-01RA	1E0000H ~ 1E4FFFH

② Content
The following check are performed for the optional RAM.
The following process is performed for memory addresses to be checked.

PASS1: memory data save
PASS2: Data "00H" write
PASS3: Data "00H" read and comparison, data "55H" write
PASS4: Data "55H" read and comparison, data "AAH" write
PASS5: Data "AAH" read and comparison
PASS6: Memory data restore

If a compare error is found in the check sequence from PASS1 to PASS6, error print (error code E1) is performed. If there is no error found to the end of the last address, the operation is completed normally.

Address to be checked
1E0000H, 1E0001H
1E0002H, 1E0004H
1E0008H, 1E0010H
1E0020H, 1E0040H
1E0080H, 1E0100H
1E0200H, 1E0400H
1E0800H, 1E1000H
1E2000H, 1E4000H
1E8000H, 1F0000H → (For ER-02RA)

DOT DISPLAY: O – R A M T S S R V

7-SEGMENT DISPLAY:

③ Check the following items.
Check the termination print.

④ Test termination
The test terminates after printing the termination printout.

Termination print

E01---01RA	200	(ER-01RA data check error)
E02---01RA	200	(ER-01RA address check error)
E01---02RA	200	(ER-02RA data check error)
E02---02RA	200	(ER-02RA address check error)
01RA	200	(ER-01RA normal end)
02RA	200	(ER-02RA normal end)

2) Option ROM test

① Key operation:
400 → [TL]

② Functional description:
A sum check is done for the option ROM (Address hex C80000H thru C9FFFFH.)

DOT DISPLAY: O – R O M T S S R V

7-SEGMENT DISPLAY:

③ Check the following items:
Check the termination printout.

④ Test termination:
The test terminates after printing the termination printout.
Termination printout

Normal termination

	400
ROM	27010※※※※※
	※※※※※
E – – – – –	400
ROM	27010※※※※※
	※※※※※

※※※※※: ROM version No.

	400
ROM	27010RAO1A
	RAO1A

CHAPTER 6. RS232 I/F (ER-A5RS)

1. Outline

The ER-A5RS are interface PWB options for the ER-A460/A470. The control ROM (ER-A46R1) must be installed in order to use this PWB options.
Refer to the programming manual for system setup and configure the correct setting appropriate to the devices selected.

ER-A5RS

1) Online interface
   a) Interface : RS232
   b) Duplex type : Half-duplex/Full-duplex
   c) Line configuration : Direct connection/Modem connection
   d) Data rate : 9600, 4800, 2400, 1200, 600 and 300 bps (Programmable)
   e) Synchronizing mode : Asynchronous
   f) Parity check : Vertical parity check (odd)
   g) Code : ASCII
   h) Bit sequence : LSB first
   i) Data format : 1 start bit + 7 dat bits + 1 parity + 1 stop bit

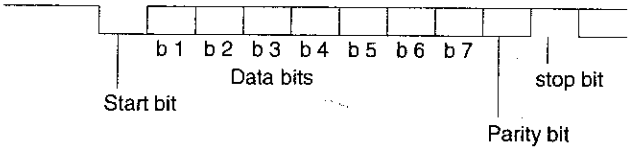

   j) Protocol : Polling/selecting (Simple procedure)
   k) Transmission line:
      Cable: Shielded cable
      Connector: D-sub 9 pin (female type) connector
      (ECR side) Inch pitch (4-40 UNC) lock screw
      Connector cover: Shielded cover

2. Components list

ER-A5RS

NO	NAME	PARTS CODE	Q'ty
1	PWB UNIT	CPWBS7292RC01	1
2	BRACKET	LANGT7466RCSA	1
3	SCREW (FOR PWB AND BRACKET)	LX-BZ6665RCZZ	2
4	SCREW (FOR HOLDING OF THE PWB BRACKET, AND BRACKET TO BRACKET)	LX-BZ6774RCZZ	3
5	SCREW (FOR HOLDING OF THE RS232 CABLE CORE)	XHBSD30P08000	2
6	WIRE TIE	LBNDJ2004SCZZ	1
7	CLAMP (FOR RS232 CABLE)	LHLDW6814RCZZ	2
8	SPACER	PSPAN7039XCZZ	1
9	FERRITE CORE (FOR EXTERNAL CABLE)	RCORF6658RCZZ	2
10	FERRITE CORE (FOR EXTERNAL CABLE)	RCORF6666RCZZ	2

* The ER-A460/A470 does not use No.8 = SPACER and No.9 = FERRITE CORE.

3. Installation procedure

1) Connect the internal cable to the interface PWB unit.

RS232 cable

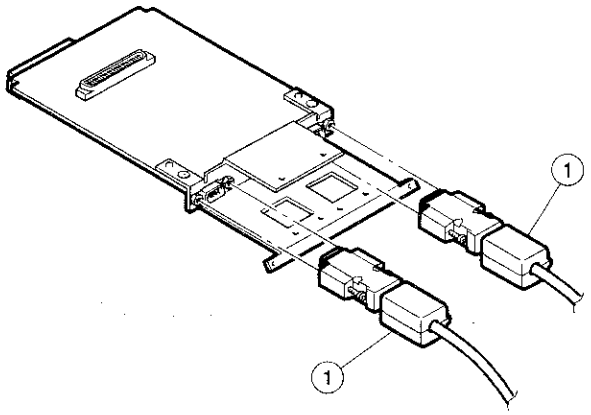

Fig. 1

- Be sure to install the core ① (RCORF6666RCZZ) on RS-232C cable.

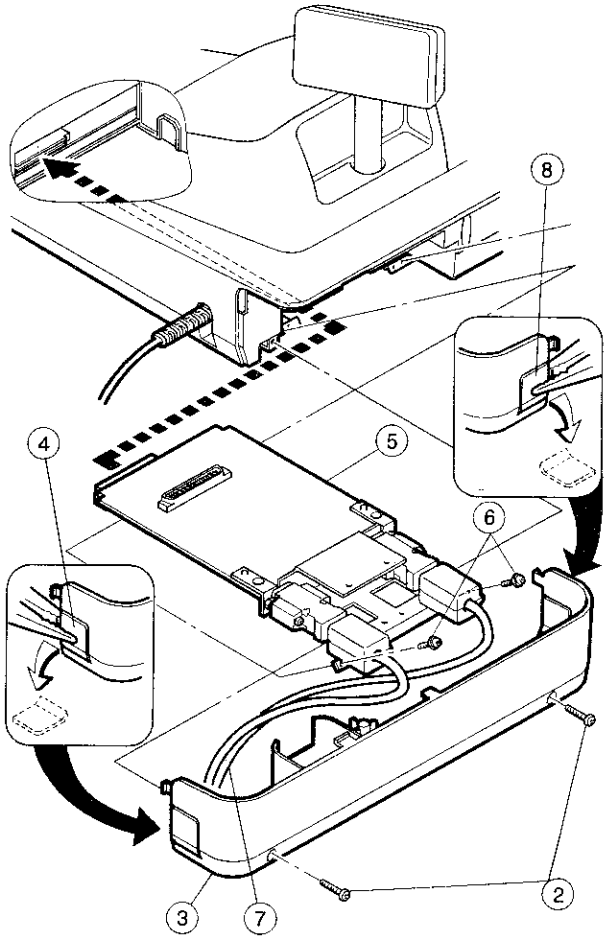

Fig. 2

2) Remove two rear cover holding screws ② and remove the rear cover ③.

   * The interface PWB needs to be inserted into the left side slot as seen from rear.

   * Tilt up the popup dispalay when removing the rear cover.

3) Break open the knockout ④ or ⑧ of the rear cover ③.
After beraking open the knockout ④, file off the new hole.

4) Insert the interface PWB ⑤ onto the connector of the main PWB, and fasten the bracket to the chassis using screws ⑥ (LX-BZ6774RCZZ: Self tap screw).

   ⁎ Insert both sides of the interface PWB along the guides of the bottom cabinet.

5) Route the external cable ⑦ through the hole and fasten the rear cover (Fig.5)

4. External cable routing

In the ER-A460/A470, option cables can be pulled out from left side or right side points in the rear cover of the body. Refer to Fig.3.

1) The picture below shows how to pull out the cables from the left side.

<Left side>

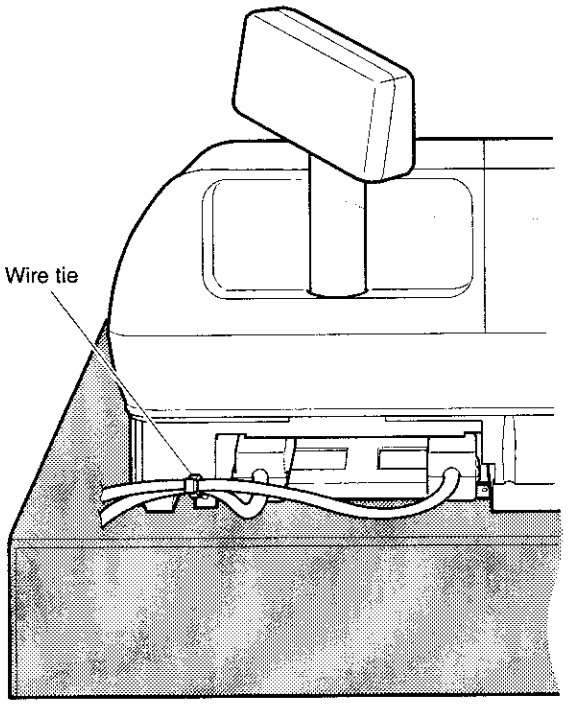

Fig. 3

<Right side>

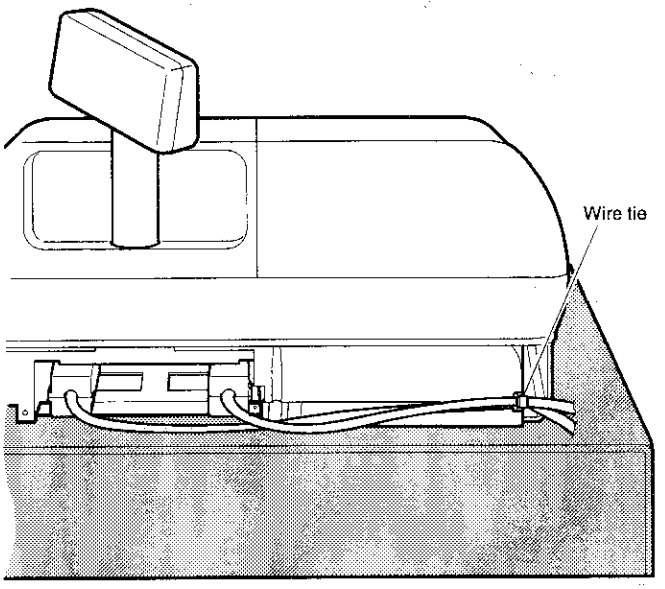

Fig. 4

5. Operation test

Please, refer to service manual. (CODE:00ZERA46VOSME)

CHAPTER 7. REMOTE DRAWER (CBOXD7136BH01)

CAUTION:
The drawer unit should be securely fitted to the supporting platform to avoid instability when the drawer is open.

1. Outline

The ER-A460/A470 allows connection of one remote drawer.

- Drawer connectors

  The main PWB is equipped with two drawer connectors (DRCN1, DRCN2) as standard provision.

  DRCN2: For a standard drawer
  DRCN1: For the remote drawer

2. Installation procedure

1) Remove the top cabinet.
2) Remove the rear cover.
3) Remove the lower cabinet.

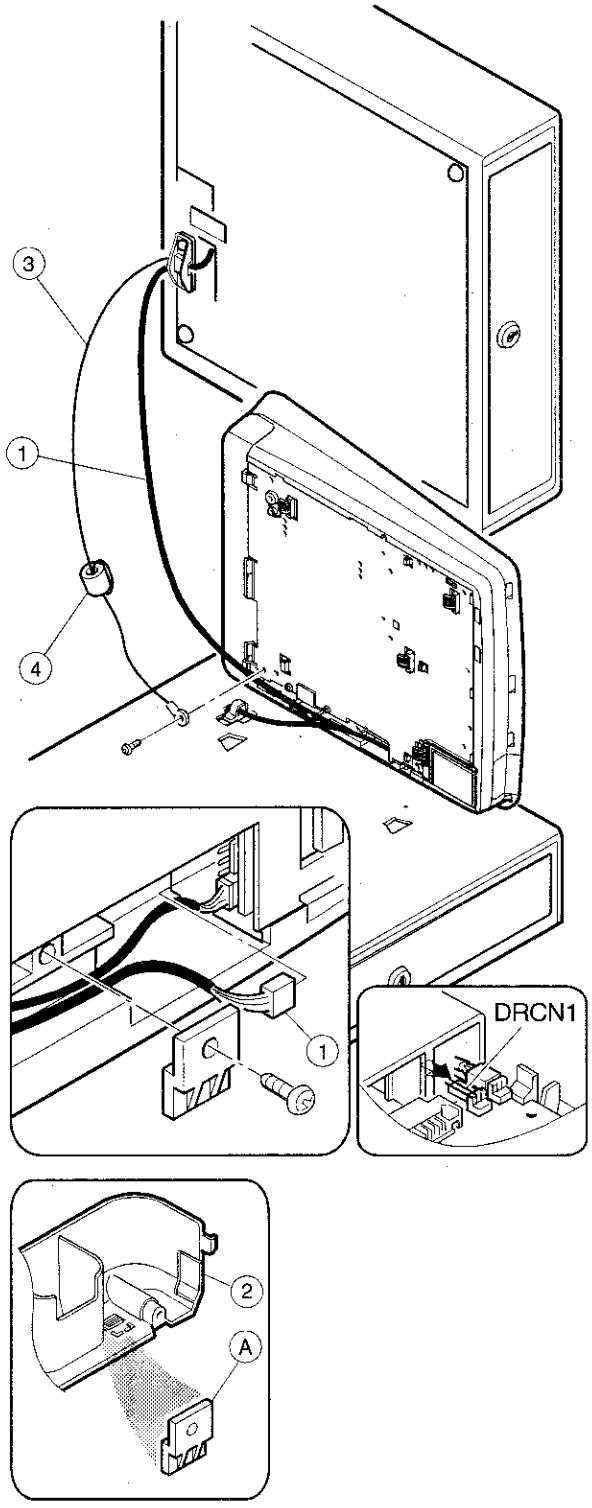

4) Connect the remote drawer cable ① to the drawer connector DRCN1 of the main PWB.
5) Pass the remote drawer cable ① along the groove in the back surface of the lower cabinet.
6) Remove the split Ⓐ of the rear cover ② and fix the drawer cable to the lower cabinet.

7) Attach grounding wire ③ to the shield plate.
Use the screw which is fixing the shield plate to fix grounding wire ③ together.

8) Attach and fix grounding wire ③ to the shield plate.

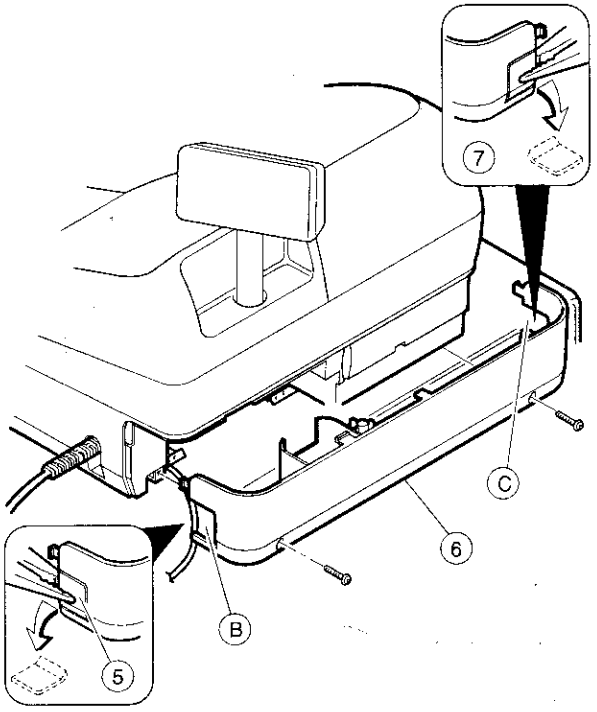

9) Break open the knockout ⑤ of the rear cover ⑥ using the tool.
After breaking open the knockout ⑤ or ⑦, file off the sides of the new hole.

10) Route the Remote drawer cable 1 through the hole (Ⓑ or Ⓒ) and fasten the rear cover.

3. Drawer open sensor test

① Key operation
110~111 → [TL]

② Function description
The drawer indicated by the job number is opened to check the proper action.
Drawer opened: O indicated
Drawer closed: C indicated
110: Drawer-1: Standard drawer
111: Drawer-2: Remote drawer

DOT DISPLAY: D R A W E R Y S R V
7-SEGMENT DISPLAY: X

X: O= Drawer opened
C= Drawer closed
Y: 1 or 2

③ Check the following items:
a) Check opening of the specified drawer.
b) Check the display indication when the drawer is open and close.

④ Any key depression terminates the test with the termination print.

11 X Test termination print	X: 0~1

CHAPTER 8. DRAWER FIXING KIT (DKIT-8633RCZZ)

The drawer fixing kit is used for securing the cash drawer when installing separately from the ECR main unit or remote drawer.
By using two of brackets, the drawer box can be protected from drifting especially when it is filled with coins.

1. Parts list

KIT CODE: DKIT-8633RCZZ

No.	Parts code	Description	Q'ty
1	LBRC-2321RCZZ	Fixing bracket	2
2	XTPSD40P16000	Tapping screw M4x16	4
3	XBSSD40P16000	Flat head screw M4x16 (For remote drawer)	2
4	XUSSD40P20000	Flat head screw M4x20 (For standard drawer)	2
5	XBPSD40P22000	Screw M4x22	4
6	XNESD40-32000	NUT M4x32	4

2. Installation procedure

1) Turn over the drawer bottom side and remove rubber footing at two to locations.
2) Fasten the bracket together with the rubber footing using the pand hand screw.
   Pay attention for the installing direction of the bracket that the pan head screw can be inserted properly into the bracket.

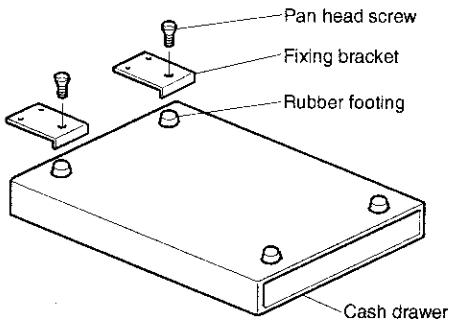

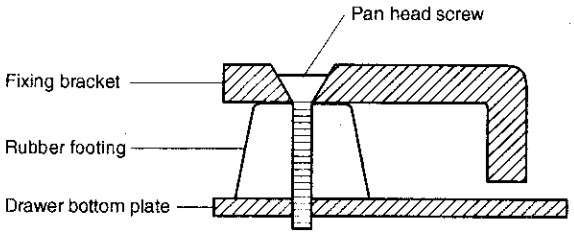

Fig. 1

3) Fastening on the table:
   Secure the fixing Bracket using the screw (Fig. 2).
   If the thickness of the table is less than 15mm, bore a 4.5mm hole in the table and fasten it with the screw (XBPSD40P22000 - 4pcs.) and nut (XNESD40-32000 - 4pcs.).

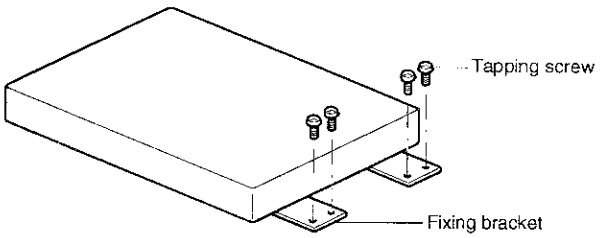

Fig. 2

CHAPTER 9. ONE HOLE CLERK KEY (ER-A5CL)

1. Components list

NO.	PARTS CODE	DESCRIPTION	Q'TY
1	LKGiW7339RCZZ	Clerk key body	1
2	LKGiM7340RCZZ	Clerk key 1	1
3	LKGiM7341RCZZ	Clerk key 2	1
4	LKGiM7342RCZZ	Clerk key 3	1
5	LKGiM7343RCZZ	Clerk key 4	1
6	LKGiM7344RCZZ	Clerk key 5	1
7	LKGiM7345RCZZ	Clerk key 6	1
8	QCNW-7062RCZZ	Cable 3P	1
9	QCNW-7063RCZZ	Cable 2P	1
10	QCNW-7593RCZZ	Earth wire	1
11	LBNDJ0013FCZZ	Band	2
12	HDECB6828RCZZ	Clerk panel	1
13	LHLDW2341RCZZ	Holder	2
14	LX-BZ6774RCZZ	Screw	1
15	RCORF6661RCZZ	Core	1
16	GCOVA7107BHZB	Clerk cover B	1
17	LANGT7581BHZZ	Clerk angle	1
18	XUSSD26P08000	Screw	1

* The ER-A460/A470 does not use No.11 = Band No.12 = Clerk panel and No.13 = Holder.
* From 1995 September production, No.16 ~ 18 are packed together with the ER-A5CL.

2. Installation procedure

1) Remove the top cabinet.
2) Remove the main PWB.
3) Remove the clerk cover A.
4) Attach clerk angle ② to clerk key body ① and fix with screw ⑥ (XUSSD26P08000).
5) Install the key switch body ① to the clerk cover B ⑦ then install it the bottom cabinet.
6) Fix the earth wire ③ with the main chassis, using the screw ④ (LX-BZ6774RCZZ)
7) Attach the core ⑤ to the earth wire ③.

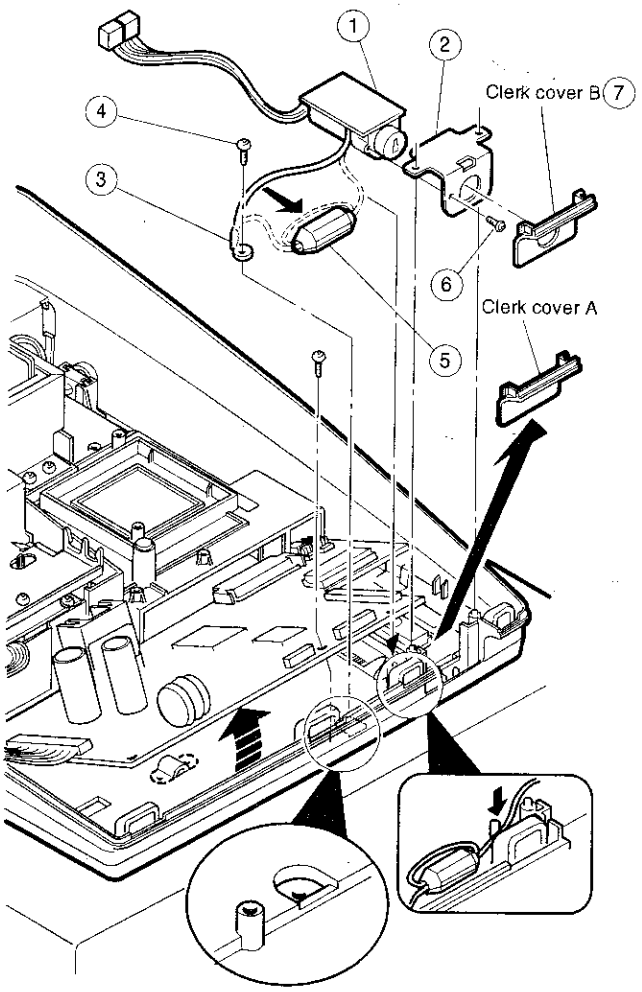

Note: 1. When the ER-A5RS is used, the main PWB must be removed. Remove the ER-A5RS before work.

8) Install the clerk key connector cables ⑥ (CN1, CN8)
   * Connect with the connector of the same color.

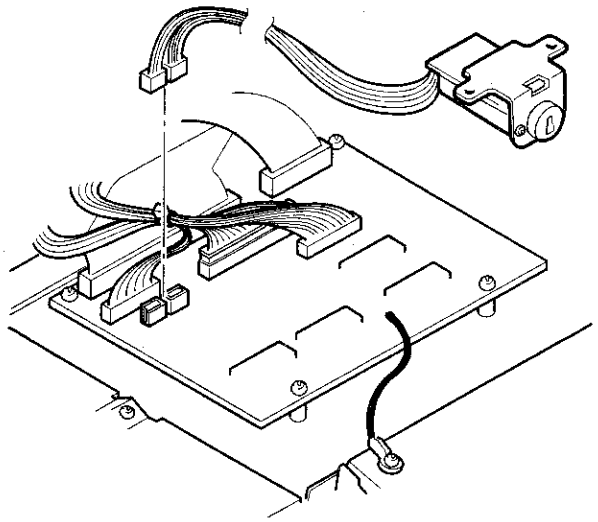

3. Operation test

1) Key, clerk, and switch position code display

① Key operation
101 → [TL]

DOT DISPLAY: C L K / K E Y S R V
7-SEGMENT DISPLAY: ○○○ — — ○○○ — —
Person-in-charge code
Key position code

② Functional description
Key, clerk, and receipt switch codes are displayed.

③ Check the following items:
Change key and switch positions for proper display activation.
Clerk code: 1 hole clerk key
000 (off state)
001 (Clerk 1)
002 (Clerk 2)
⌇
255 (Clerk 255)
Key code: --- (simultaneous two key) depression, invalid entry)

KEY POSITION CODE
ER-A460 (Normal key) 14 x 6

↑R	↑J	016	022	028	034	040	046	052	058	064	070	076	082
005	010	015	021	027	033	039	045	051	057	063	069	075	081
004	009	014	020	026	032	038	044	050	056	062	068	074	080
003	008	013	019	025	031	037	043	049	055	061	067	073	079
002	007	012	018	024	030	036	042	048	054	060	066	072	078
001	006	011	017	023	029	035	041	047	053	059	065	071	077

ER-A470 (Flat key) 15 x 8

↑R	↑J	022	030	038	046	054	062	070	078	086	094	102	110	118
007	014	021	029	037	045	053	061	069	077	085	093	101	109	117
006	013	020	028	036	044	052	060	068	076	084	092	100	108	116
005	012	019	027	035	043	051	059	067	075	083	091	099	107	115
004	011	018	026	034	042	050	058	066	074	082	090	098	106	114
003	010	017	025	033	041	049	057	065	073	081	089	097	105	113
002	009	016	024	032	040	048	056	064	072	080	088	096	104	112
001	008	015	023	031	039	047	055	063	071	079	087	095	103	111

④ Test termination
Change the MODE switch position other than SRV position to terminate the test. The test termination message is printed.

101
Test termination print

CHAPTER 10. JOURNAL NEAR END SENSOR (DUNT-4945BHZZ)

1. Outline

This option sensor is used to sense the journal paper near end.

2. Parts list

NO.	PARTS CODE	DESCRIPTION	Q'TY
1	—	Journal near end sensor unit	1
2	QCNCM6865RCOB	2-pin connector	1
3	XUBSD30P08000	Screw (For sensor unit)	1
4	XHBSD30P04000	Screw (For grounding wire)	1

3. Installation procedure

1) Remove the top cabinet.
2) Remove the printer unit.
3) Remove the main PWB.

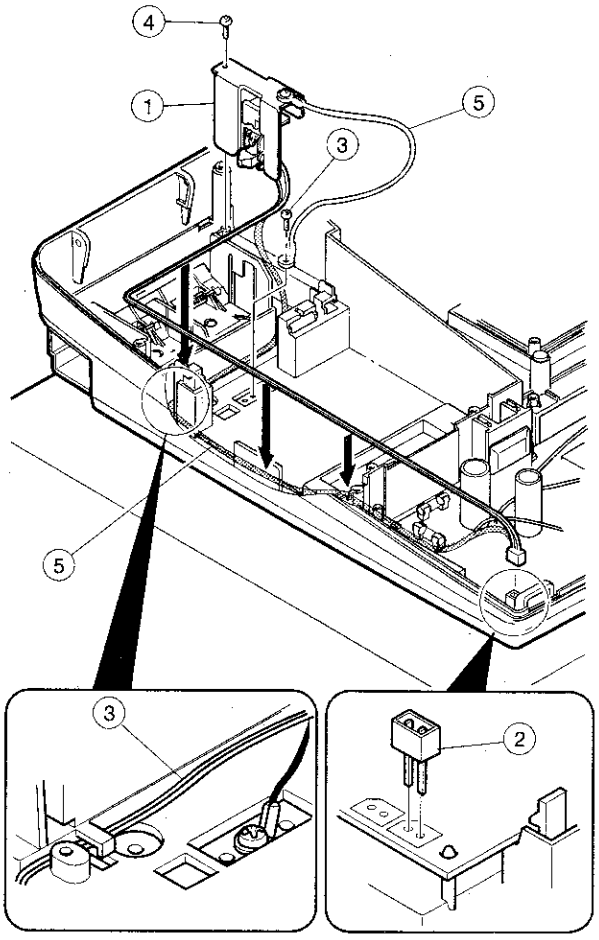

4) Solder the 2-pin connector ② to Location No. CNB:NEJ on the main PWB.
5) Replace the main PWB.
6) Fix the sensor unit ① to the paper holder on the lower cabinet with the screw ④. (XUBSD30P08000)
7) Arrange the sensor cable ⑤ as shown in the figure and connect to the main PWB.
8) Attach the grounding wire ⑤ to the shield plate with the screw ③ (XHBSD30P04000)
9) Replace the printer unit and the top cabinet.

4. Operation test

Printer sensor test

① Key operation

106 → [TL]

② Details of test

Check the state of the paper near end sensor and the validation sensor.

DOT DISPLAY: S E N S O R S R V

7-SEGMENT DISPLAY: x x y y

③ Check item

x, x: Near end, receipt side, journal side
y, y: Validation, receipt side, journal side
C: Paper present
O: Paper empty
"C" is displayed also when there are no sensors.

④ Test end

Press any key to terminate the test. The end print is as follows:
106

CHAPTER 11. KEY TOP KIT (FOR ER-A460 ONLY: ER-11KT7/ 12KT7/ 22KT7/ 11DK7/ 51DK7)

1. Outline

The ER-A460 employs the following key top (option) to allow additional installation of the key top and change in the key layout.

MODEL NAME	DESCRIPTION	Q'ty
ER-11KT7	1 × 1 Key top	30
ER-12KT7	1 × 2 Key top	30
ER-22KT7	2 × 2 Key top	10
ER-11DK7	1 × 1 Dummy key	30
ER-51DK7	5 × 1 Dummy key	10

2. Installation procedure

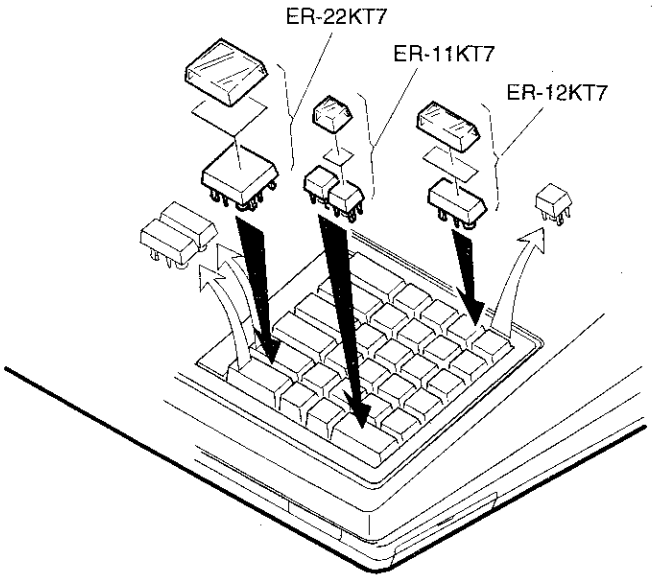

① ER-11KT7

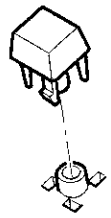

② ER-12KT7, ER-22KT7

1) Attach two spacers to the keyboard frame.

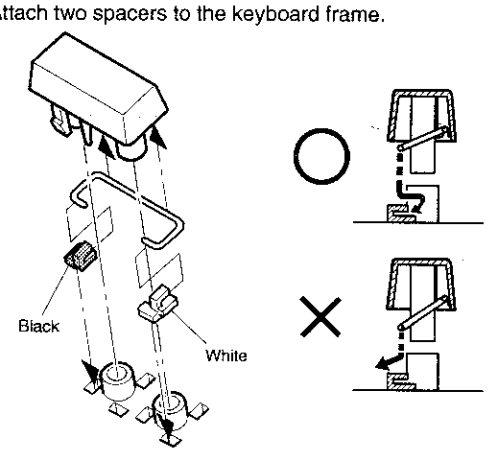

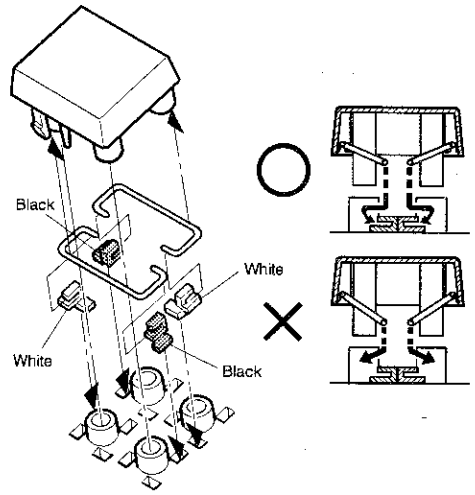

- Attach the black spacer to the left lower side, and the white spacer to the right lower side.

2) The key top of the ER-12KT7 and the ER-22KT7 includes the guide pin. Install the key top so that the guide pin is engaged with the spacer attached to the keyboard frame.

③ ER-11DK7, ER-51DK7

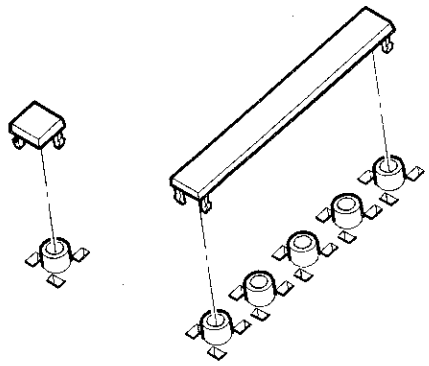

3. Operation test

1) Key, clerk, and switch position code display

① Key operation
101 → [TL]

DOT DISPLAY: C L K / K E Y S R V
7-SEGMENT DISPLAY: ○○○ – – ○○○ – –
Person-in-charge code
Key position code

② Functional description
Key, clerk, and receipt switch codes are displayed.

③ Check the following items:
Change key and switch positions for proper display activation.
Clerk code: 1 hole clerk key
000 (off state)
001 (Clerk 1)
002 (Clerk 2)
⋮
255 (Clerk 255)
Key code: --- (simultaneous two key) depression, invalid entry)

KEY POSITION CODE
ER-A460 (Normal key) 14 x 6

↑R	↑J	016	022	028	034	040	046	052	058	064	070	076	082
005	010	015	021	027	033	039	045	051	057	063	069	075	081
004	009	014	020	026	032	038	044	050	056	062	068	074	080
003	008	013	019	025	031	037	043	049	055	061	067	073	079
002	007	012	018	024	030	036	042	048	054	060	066	072	078
001	006	011	017	023	029	035	041	047	053	059	065	071	077

ER-A470 (Flat key) 15 x 8

↑R	↑J	022	030	038	046	054	062	070	078	086	094	102	110	118
007	014	021	029	037	045	053	061	069	077	085	093	101	109	117
006	013	020	028	036	044	052	060	068	076	084	092	100	108	116
005	012	019	027	035	043	051	059	067	075	083	091	099	107	115
004	011	018	026	034	042	050	058	066	074	082	090	098	106	114
003	010	017	025	033	041	049	057	065	073	081	089	097	105	113
002	009	016	024	032	040	048	056	064	072	080	088	096	104	112
001	008	015	023	031	039	047	055	063	071	079	087	095	103	111

2) Keyboard test

① Key operation
XXXX104 → [TL]
XXXX: Sumcheck data

Standard key layout sumcheck data	
ER-A460	3681
ER-A470	7449

② Details of test
Keyboard check is performed with the sum check data of key code.
For sum check data, data are inputted to the upper four digits before the diagnostics code. The data are compared with the added data which are added until the final key (TL) is pressed. If the data agree with the added data, the end print is made. If not, the error print is made.

The sum check data is obtained by totalizing all key hardware codes except for the TL key and converting the total into a decimal figure.

ER-A460 KEY HARDWARE CODE

1. STANDARD KEY LAYOUT
SUM CHECK DATA = 6F+65+63+00+02+ ····· = E98 = 3681

↑R	↑J	6F		65		63		00	02	08	0C	0E
7E	7F	77		74	73	71		10	12	16	18	0D
5E	7D	5F		55	54	53		50	52	56	59	2B
4E	5D	4F		45	44	43		42	46	48	39	0B
4D		2F		25	24	23		26	28	09		1B
3D		37			7B	78		3A	2A	2C	TL	

2. ALL KEY LAYOUT

↑R	↑J	6F	67	65	64	63	61	21	00	02	08	0C	0E
7E	7F	77	75	74	73	71	70	11	10	12	16	18	0D
5E	7D	5F	57	55	54	53	51	31	50	52	56	59	2B
4E	5D	4F	47	45	44	43	41	40	42	46	48	39	0B
4D	2D	2F	27	25	24	23	20	22	26	28	09	0A	1B
3D	3F	37	3E	1E	7B	78	79	1A	3A	2A	2C	1C	1D

ER-A470 KEY HARDWARE CODE

1. SUM CHECK DATA = 0F+06+05+04+00+····· = 1D0E = 7438

↑R	↑J	0F	06	05	04	00	01	07	0B	0A	09	08	0C	0D
4F	46	45	44	40	41	42	43	47	4B	4A	49	48	4C	4D
3F	36	35	34	30	31	32	33	37	3B	3A	39	38	3C	3D
2F	26	25	24	20	21	22	23	27	2B	2A	29	28	2C	2D
1F	16	15	14	10	11	12	13	17	1B	1A	19	18	1C	1D
5F	56	55	54	50	51	52	53	57	5B	5A	59	58	5C	5D
6F	66	65	64	60	61	62	63	67	6B	6A	69	68	6C	6D
7F	76	75	74	70	71	TL	73	77	7B	7A	79	78	7C	7D

2. ALL KEY LAYOUT

↑R	↑J	0F	06	05	04	00	01	07	0B	0A	09	08	0C	0D
4F	46	45	44	40	41	42	43	47	4B	4A	49	48	4C	4D
3F	36	35	34	30	31	32	33	37	3B	3A	39	38	3C	3D
2F	26	25	24	20	21	22	23	27	2B	2A	29	28	2C	2D
1F	16	15	14	10	11	12	13	17	1B	1A	19	18	1C	1D
5F	56	55	54	50	51	52	53	57	5B	5A	59	58	5C	5D
6F	66	65	64	60	61	62	63	67	6B	6A	69	68	6C	6D
7F	76	75	74	70	71	72	73	77	7B	7A	79	78	7C	7D

DOT DISPLAY: K E Y T E S T S R V
7-SEGMENT DISPLAY: ○○○
Key code

③ Check item
A) Check the display in the test and the content of end print.

④ Test end

Normal end	104
Error	E - - - 104

SHARP SERVICE MANUAL

CODE: 00ZEREUROSM/E

SERVICE MANUAL FOR EURO FUNCTION

ER-A440/A450
ER-A460/A470
ER-A490
ER-A550S
MODEL ER-A570/A610

CONTENTS

CHAPTER 1. ABOUT FOR EURO FUNCTION 1

CHAPTER 2. EURO FUNCTION-COMPATIBLE ROM TABLE. 6

CHAPTER 3. ROM REPLACEMENT. 8

CHAPTER 4. PROGRAMMING FOR EURO FUNCTION 9

Parts marked with "⚠" is important for maintaining the safety of the set. Be sure to replace these parts with specified ones for maintaining the safety and performance of the set.

SHARP CORPORATION

This document has been published to be used for after sales service only.
The contents are subject to change without notice.

CHAPTER 1. ABOUT FOR EURO FUNCTION

In this section, it is described about common EURO functions of ECR.

The DISPLAY/PRINT SAMPLE and PROGRAMMING JOB of each models are described at the other section.

1. CURRENCY EXCHANGE (Exn) RATE

The CURRENCY EXCHANGE RATE is changed from "4integer+4decimal" to "3integer+6decimal".

[Programming]

(PGM mode)

Currency Exchange Rate programming

	A440/ A450	A460/ A470	A490	A550S	A570/ A610
JOB#	1310	1310	1310	1310	1310

2. New CG of EURO Symbol

- **EURO character code = 207**

3. DOMESTIC CURRENCY SYMBOL

[Programming]

(SRV mode)

Domestic currency symbol programming

	A440/ A450	A460/ A470	A490	A550S	A570/ A610
JOB#	986	915-A	915-A	915-A	915-A

4. FOREIGN (EX1) CURRENCY SYMBOL

- EURO symbol character code is added into the Chatacter Code Table.
- EURO symbol is used to print the EURO amount.
- ECR can use the EURO symbol character for the domestic currency symbol or exchange (EX1) currency symbol by below programming jobs.
- The selection of foreign currency symbol is supported only for EX1 (EURO) because the EURO is used at EX1 or Domestic currency.

(Notes)

- About Remote Printers and Slip printers (ER-01RP/02RP/03RP/04RP, EPSON TM-295/300/T85, INDATEC SLIP etc...):
  ECR cannot support to print EURO SYMBOL on Remote Printers and Slip Printers. The EURO symbol is not printed on them because they do not have EURO symbol themselves now.

[Programming]

(PGM mode)

Currency symbol for EX1 key programming

	A440/ A450	A460/ A470	A490	A550S	A570/ A610
JOB#	2334	2680-F	2680-F	2680-F	2680-F

5. FOREIGN CURRENCY DRAWER

[Programming]

(PGM mode)

Exchange drawer No. programming

	A440/ A450	A460/ A470	A490	A550S	A570/ A610
JOB#	2680	2680-E	2680-E	2680-E	2680-E

6. FOREIGN CURRENCY DRAWER OPEN function

This function is used to open the foreign currency drawer without any sales entry.

Case of Opening FOREIGN CURRENCY DRAWER

(1) At the timing of issuing receipt after tendering foreign currency amount.

(2) FOREIGN CURRENCY DRAWER OPEN function (THIS FUNCTION)

(3) At the timing of issuing XZ REPORT (included CCD)

[Purpose]

This function is used for opening the foreign currency drawer when the change due of a transaction is given by foreign currency just after a transaction.

[Operation]

Key entry sequence

---- EXn ----

[Entry conditions]

Operating modes that allow the entry: REG and MGR modes (It is not allowed in the VOID mode).

This operation cannot be mixed with other entries such as sales entry within a transaction, and it cannot be mixed with the non-add code entry.

[Action]

This operation opens the foreign currency drawer.

This operation is executed only when the foreign currency drawer is set.

This operation dose not have any counter and totalizer.

7. EX1 amount for TOTAL and CHANGE

- This function is selectable at PGM mode (PRINT or NOT).
  If "NOT" is selected, the total is printed as domestic currency. (Current spec)
  If "PRINT" is selected, TOTAL AMOUNT is printed both Domestic amount and EX1 amount (which is calculated by EX1 RATE).
  But, EX1 amount is not printed when SUBTOTAL VOID is executed.

[Programming]

(PGM mode)

Printing of EX1 amount for Total and Change

	A440/ A450	A460/ A470	A490	A550S	A570/ A610
JOB#	2616-X9-D	2680-A	2680-A	2680-A	2680-A

8. EX1 amount for TOTAL and TENDERING VP (NORMAL VP)

- This function is available only for VP of the finalized function (TOTAL VP, MEDIA VP) in Normal VP.
  It is not available for the VP (ITEM VP, RA/PO VP etc) except the finalized function.
- When the VP of the finalized function (TOTAL VP, MEDIA VP) is executed, it is printed "TOTAL amount" and "EXCANGE1 amount" which is converted from the total amount.
  But, it does not print the EX1 amount at the VP (ITEM VP, RA/PO VP etc) without the finalized function.
- This function is selectable at PGM mode (PRINT or NOT).
  If "NOT" is selected, the VP format is same as the current spec.
- In case of "EX1 AMOUNT PRINT FOR TOTAL VP", Cashier/Clerk code and TIME are not printed at VP.

ER-A490/A570/A610:

- The CURRENCY DISCRIPTER is not printed on VP (because it dose not have any space).
- FRENCH CHECK, EURO CHECK, ENGLISH CHECK, GERMAN CHECK:
  This function is not available for FRENCH CHECK, EURO CHECK, ENGLISH CHECK and GERMAN CHECK because they do not have the printing space on their format.
  They print the domestic amount only.
  (It means to keep the current specification.)

[Programming]

(PGM mode)

JOB#2680-B: Printing of EX1 amount for Total and Tendering VP

	A440/ A450	A460/ A470	A490	A550S	A570/ A610
JOB#	2616-X9-E	2680-B	2680-B	2680-B	2680-B

9. FOREIGN CURRENCY (EXn) TAB

- It is selectable the TAB position for each EXCHANGE.
- The programmed TAB position is used to print and display the exchange amount.
  It is not referred when the exchange amount is calculated by the exchange rate.
  The exchange rate must be programmed as the rate for lowest digit.

Ex)

(1) Domestic Currency TAB = 2 , Foreign Currency TAB = 0
In case of "Domestic Currency 1.00 is same as Foreign Currency 50", the exchange rate is 0.500000 (← 50 Foreign/100 Domestic).

(2) Domestic Currency TAB = 2, Foreign Currency TAB = 1
In case of "Domestic Currency 1.00 is same as Foreign Currency 50.0", the exchange rate is 5.000000 (← 500 Foreign/100 Domestic).

[Programming]

(PGM mode)

JOB#2330 : TAB for EXCHANGE keys

10. CHECK, CREDIT operation for EX1 EX1 Calculation method selection EX1 CHK+CR totalizer text

- This function is available only when either EURO currency or LOCAL currency is assigned to EX1.
  (It is available only while EURO status is (B) or (C).)
- The tendered amount of CHECK, CREDIT for EX1 is calculated to common totalizer (EXCHANGE1 CHECK+CREDIT SALES).
- The tendered amount of CHECK, CREDIT for EX1 is not sent to EFT terminal because it is not clear to be supported the entry of foreign currency (EURO) by EFT terminal.
- If this function is used under the EURO status (B) [EX1 as EURO], EX1 amount must be calculate by division for rate because it is decided that EURO exchange rate must be "1EURO=xx.xxxxxx LOCAL Currency".

[Operation]

(1) EX1 (All models)

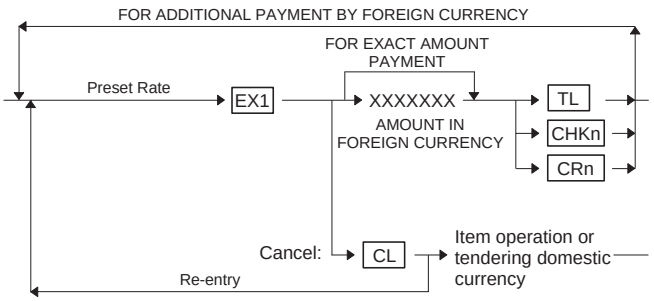

(2) EX2~4 (ER-A440/A450/A460/A470/A550S)

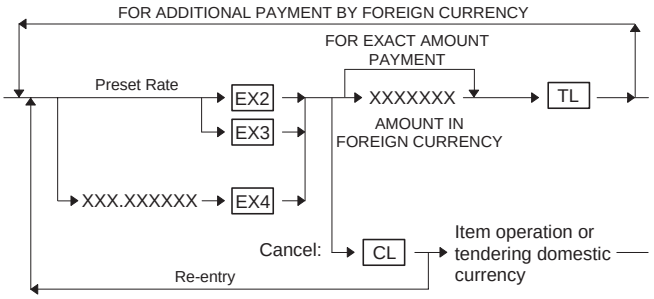

(3) EX2~9 (ER-A490/A570/A610/A650/A670)

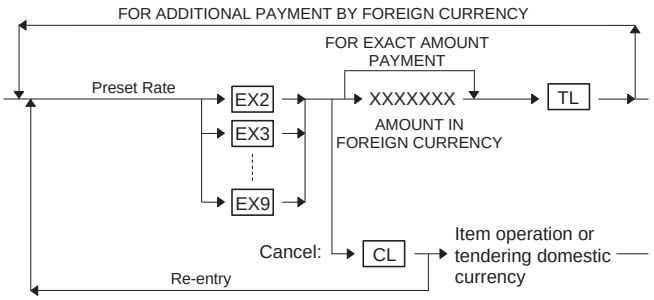

[Programming]

(PGM mode)

CHECK, CREDIT operation for EX1

	A440/ A450	A460/ A470	A490	A550S	A570/ A610
JOB#	2616-X9-C	2680-C	2680-C	2680-C	2680-C

EX1 Calculation method

	A440/ A450	A460/ A470	A490	A550S	A570/ A610
JOB#	2616-X9-B	2680-D	2680-D	2680-D	2680-D

EX1 CHK+CR totalizer text

	A440/ A450	A460/ A470	A490	A550S	A570/ A610
JOB#	2314	2314	2314	2314	2314

11. CHANGING EURO FUNCTION

(Changing EURO Function)

X1/Z1 mode:

800 → [•] → [⊗] → X → [TL]

X: 1 = EURO STATUS (B)
2 = EURO STATUS (C)
3 = EURO STATUS (D)

About EURO STATUS are shown the following pages.

It is executing automatically to change from status (A) to status (B), (C), (D).

Selectable type is one of below 4 types.

And the selectable type is decided as below for each status.

CURRENT STATUS ↓	Selectable STATUS			
	(A)	(B)	(C)	(D)
(A)	—	×	×	×
(B)	—	—	×	×
(C)	—	—	—	×
(D)	—	—	—	—

Marked "×" is selectable

<Action>

It is executed some of below JOBs which is needed for each status.

1) Issue General Z1 report.
2) Issue General Z2 report.
3) Clear GT1/2/3.
4) Change PGM function "EX1 AMOUNT PRINTING FOR TOTAL AND CHANGE YES/NO".
5) Change PGM function "EX1 AMOUNT PRINTING FOR TOTAL VP YES/NO".
6) Change PGM function "EX1 CALCULATTION METHOD DIVISION/MULTIPLICATION".
7) Set "Domestic currency symbol" as EURO SYMBOL.
8) Set "Domestic TAB" as "2".
9) Set "EX1 currency symbol" as the suitable data.
10) Set "EX1 TAB" as the suitable data.

<Selecting type and its action>

Current status (A):

CURRENT STATUS (A)	Selected STATUS		
	(B)	(C)	(D)
1) General Z1 report	ISSUE	ISSUE	ISSUE
2) General Z2 report	ISSUE	ISSUE	ISSUE
3) GT1/2/3	—	CLEAR	CLAER
4) EX1 AMOUNT PRINTING FOR TOTAL AND CHANGE	"YES"	"YES"	"NO"
5) EX1 AMOUNT PRINTING FOR TOTAL VP	"YES"	"YES"	"NO"
6) EX1 CALCULATTION METHOD	"DIVISION"	"MULTI."	"MULTI."
7) Domestic currency symbol	—	[EURO]	[EURO]
8) Domestic TAB	—	"2"	"2"
9) EX1 currency symbol	[EURO]	The Current "Domestic currency symbol"	—
10) EX1 TAB	"2"	The Current "Domestic TAB"	—

Marked "—" is remaining the current data.

Current status (B):

CURRENT STATUS (B)	Selected STATUS		
		(C)	(D)
1) General Z1 report		ISSUE	ISSUE
2) General Z2 report		ISSUE	ISSUE
3) GT1/2/3		CLEAR	CLAER
4) EX1 AMOUNT PRINTING FOR TOTAL AND CHANGE		"YES"	"NO"
5) EX1 AMOUNT PRINTING FOR TOTAL VP		"YES"	"NO"
6) EX1 CALCULATTION METHOD		"MULTI."	"MULTI."
7) Domestic currency symbol		[EURO]	[EURO]
8) Domestic TAB		"2"	"2"
9) EX1 currency symbol		The Current "Domestic currency symbol"	[SPACE]
10) EX1 TAB		The Current "Domestic TAB"	—

Marked "—" is remaining the current data.

Current status (C):

CURRENT STATUS (C)	Selected STATUS		
			(D)
1) General Z1 report			ISSUE
2) General Z2 report			ISSUE
3) GT1/2/3			—
4) EX1 AMOUNT PRINTING FOR TOTAL AND CHANGE			"NO"
5) EX1 AMOUNT PRINTING FOR TOTAL VP			"NO"
6) EX1 CALCULATTION METHOD			"MULTI."
7) Domestic currency symbol			[EURO]
8) Domestic TAB			"2"
9) EX1 currency symbol			[SPACE]
10) EX1 TAB			—

Marked "—" is remaining the current data.

(Notes)

- This JOB cannot set below additional EURO function automatically.
  Below items must be set by each PGM JOB after this job.

  (1) EX1 RATE

  (2) "CHECK, CREDIT operation for EX1 Yes/No"

- INLINE SYSTEM:
  This job can be executed only at INLINE MASTER when the system is closed ("CLOSED STORE") because the currency unit must be changed for all machines at same time. And the "OPEN STORE" must be executed after completed this job because the currency is mixed in the system if this job (CHANGEING EURO) was not completed at some machine.

In this table, the local currency it described as DM. (The printing sample is a general format.)

STATUS		(A)	(B)	(C)	(D)
Handled currency of ECR	ITEMS (Goods)	DM	DM	EURO	EURO
	Tendering	DM Foreign [by EXn]	DM EURO [by EX1] Foreign [by EX2~]	EURO DM [by EX1] Foreign [by EX2~]	EURO Foreign [by EXn]
	Change	DM	DM	EURO (DM) [judged by cashier]	EURO
Display Currency	ITEMS	DM	DM	EURO	EURO
	TOTAL, CHANGE	DM	DM	EURO	EURO
Printing currency on Receipt	ITEMS	DM	DM	EURO	EURO
	TOTAL, CHANGE	DM	DM (EURO)	EURO (DM)	EURO
Printing currency on VP	ITEMS	DM	DM	EURO	EURO
	TOTAL	DM	DM (EURO)	EURO (DM)	EURO
EX1 Calculation method		Multiplication (Amount × Rate)	Division (Amount/Rate)	Multiplication (Amount × Rate)	Multiplication (Amount × Rate)
Rounding method of EXn	Domestic → Foreign	UP	4 (DOWN)/5 (UP)	4 (DOWN)/5 (UP)	4 (DOWN)/5 (UP)
	Foreign → Domestic	Down	4 (DOWN)/5 (UP)	4 (DOWN)/5 (UP)	4 (DOWN)/5 (UP)
Receipt Sample (Tendered by DM) ["c" = "EURO SYMBOL"] (It is a standard receipt. It may not be different from a receipt of this machine.)		DEPT01 ∗1.00 DEPT02 ∗2.00 ∗∗∗TOTAL ∗3.00 CASH ∗5.00 CHANGE ∗2.00	DEPT01 ∗1.00 DEPT02 ∗2.00 ∗∗∗TOTAL ∗3.00 c1.57 CASH ∗5.00 CHANGE ∗2.00 c1.04	DEPT01 c0.52 DEPT02 c1.04 ∗∗∗TOTAL c1.56 3.00 EXCH1 1.917620 3.00 CASH 4.00 CHANGE c0.52 1.00	
Receipt Sample (Tendered by EURO) ["c"="EURO SYMBOL"] (It is a standard receipt. It may not be different from a receipt of this machine.)			DEPT01 ∗1.00 DEPT02 ∗2.00 ∗∗∗TOTAL ∗3.00 c1.57 EXCH1 1.917620 c1.57 CHECK c2.00 CHANGE ∗0.82 c0.43	DEPT01 c0.52 DEPT02 c1.04 ∗∗∗TOTAL c1.56 3.00 CASH c2.00 CHANGE c0.44 0.84	DEPT01 c0.52 DEPT02 c1.04 ∗∗∗TOTAL c1.56 CASH c2.00 CHANGE c0.44
Currency of Report (X/Z)		DM	DM	EURO	EURO
Currency in DRAWER	Domestic Drawer	DM	DM	EURO	EURO
	Foreign Drawer	Foreign	EURO Foreign	DM Foreign	Foreign

NOTES:

<About RAM data compatibility>

ECR has the RAM data compatibility between current (NON EURO) machine and new (EURO) machine at the same model under below condition.

- The ONLINE system has the new TABLE NO. for uploading/down-loading the new programming data.
- INLINE system:
  The downloading of the new programming data is executed by using the current PGM downloading jobs.

<OTHERS>

- The guidance message function of PGM JOBs (A460/A470/A490)
  ER-A460/A470/A490 has the guidance message function.
  But, they do not support about new PGM JOB.

CHAPTER 2. EURO FUNCTION-COMPATIBLE ROM TABLE

To perform Euro function, the conventional ROM needs to be changed to the following new ROM.

1. ER-A440

	ROM			PWB UNIT		
ROM NAME	OLD	NEW (For EURO function)	LOCATION No.	PWB NAME	PWB PARTS CODE	Effective time
STANDARD ROM	VHI27020RAZ1A	VHI27020RAZ1B	IC7	MAIN PWB	CPWBN7551BH04	Jul. '98
OPTION ROM	—	—	—	—	—	—

2. ER-A450 (The model ER-Euro has a new ROM already installed.)

	ROM			PWB UNIT		
ROM NAME	OLD	NEW (For EURO function)	LOCATION No.	PWB NAME	PWB PARTS CODE	Effective time
STANDARD ROM	—	VHI27040RBK1A	IC13	MAIN PWB	CPWBX9554BH02	Jul. '98
OPTION ROM	—	—	—	—	—	—

3. ER-A460/A470

	ROM			PWB UNIT		
ROM NAME	OLD	NEW (For EURO function)	LOCATION No.	PWB NAME	PWB PARTS CODE	Effective time
STANDARD ROM	VHI27020RAU1C	VHI27020RAU1D	IC4	MAIN PWB	CPWBN7457BH02	Sep. '98
OPTION ROM (ER-A46R1)	VHI27010RAP1B	VHI27010RAP1D	IC101	MEMORY PWB	CPWBN7458BH01	

4. ER-A490

	ROM			PWB UNIT		
ROM NAME	OLD	NEW (For EURO function)	LOCATION No.	PWB NAME	PWB PARTS CODE	Effective time
STANDARD ROM	VHI27040RAV1C	VHI27040RAV1D	IC11	MAIN PWB	CPWBX7466BH03	Sep. '98
OPTION ROM (ER-A49R1)	VHI27010RAS1B	VHI27010RAS1D	IC15	MEMORY PWB	CPWBN7469BH01	Sep. '98

5. ER-A550S (The ROM ER-A55R1 that was optionally available has been changed to standard equipment.)

	ROM			PWB UNIT		
ROM NAME	OLD	NEW (For EURO function)	LOCATION No.	PWB NAME	PWB PARTS CODE	Effective time
STANDARD ROM	VHI27010RAF1D	VHI27010RAF1F	IC5 (ROM1)	MAIN PWB	CPWBN7287BH02	Sep. '98
OPTION ROM (ER-A55R1)	VHI27010RAI1A	VHI27010RAI1F	IC4 (ROM2)			

6. ER-A570

	ROM			PWB UNIT		
ROM NAME	OLD	NEW (For EURO function)	LOCATION No.	PWB NAME	PWB PARTS CODE	Effective time
STANDARD ROM	VHI27040RAJ1E	VHI27040RAJ1F	IC5 (ROM1)	MAIN PWB	CPWBN7433BH01	Sep. '98
OPTION ROM (ER-A57R1)	VHI27020RAP1C	VHI27020RAP1F	IC7 (ROM2)			

7. ER-A610

	ROM			PWB UNIT		
ROM NAME	OLD	NEW (For EURO function)	LOCATION No.	PWB NAME	PWB PARTS CODE	Effective time
STANDARD ROM	VHI27040RAI1E	VHI27040RAI1F	IC9 (ROM1)	MAIN PWB	CPWBX7430BH01	Sep. '98
OPTION ROM (ER-A61R1)	VHI27020RAN1C	VHI27020RAN1F	IC11 (ROM2)			

CHAPTER 3. ROM REPLACEMENT

Before trying to replace the ROM in the machine now available on the market, be sure to back up the data.

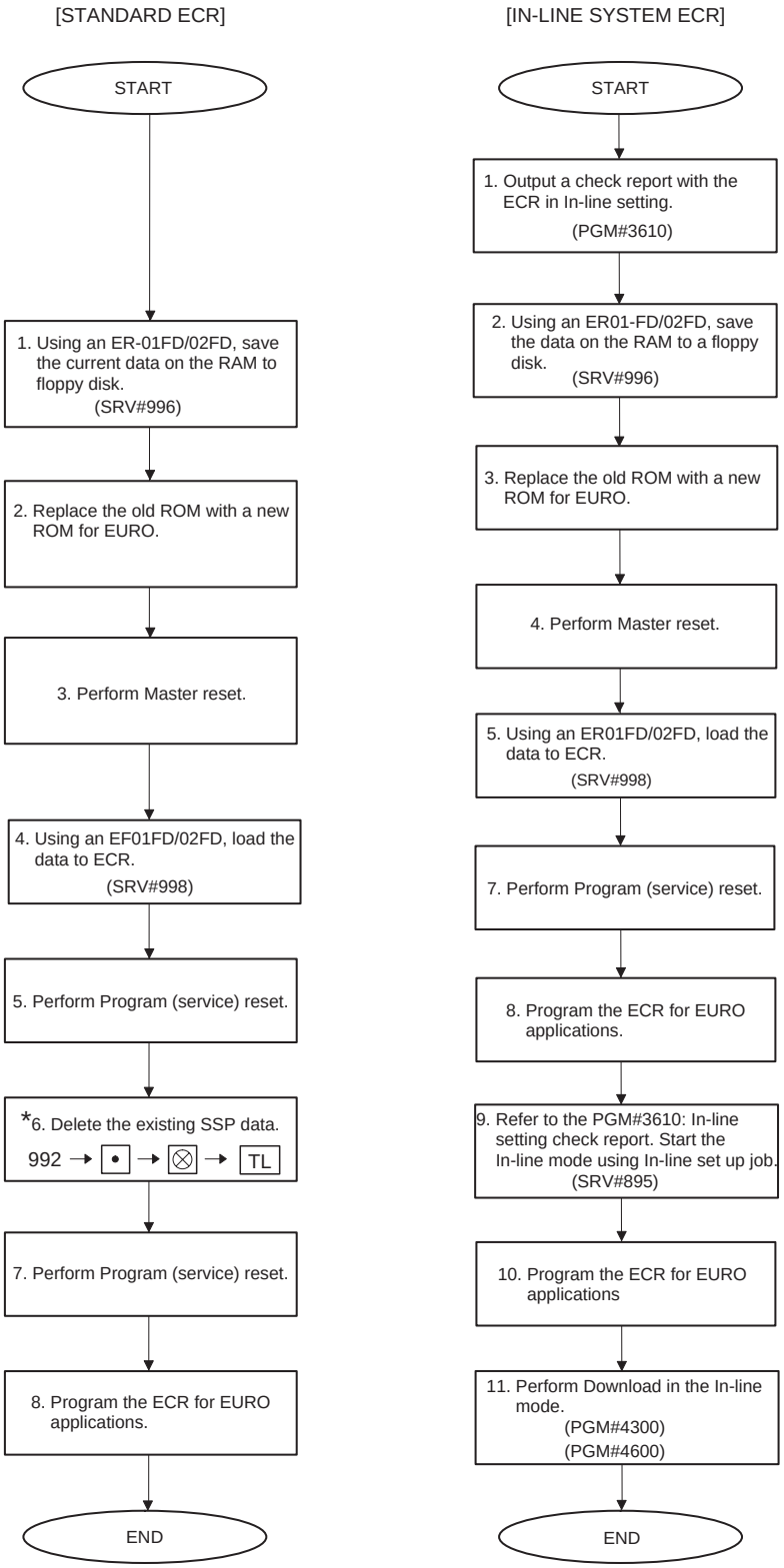

* The SSP data for an old version ROM is included in the new version ROM.

CHAPTER 4. PROGRAMMING FOR EURO FUNCTION

1. ER-A440/A450

1-1. SERVICE MODE PROGRAMMING

1) Domestic currency symbol programming

[JOB#986] MRS="_____∗"

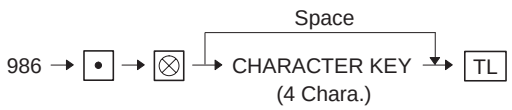

∗ EURO character code = 207

1-2. PGM MODE PROGRAMMING

1) Programming of Exchange (EURO) rate

[JOB#1310] MRS=0

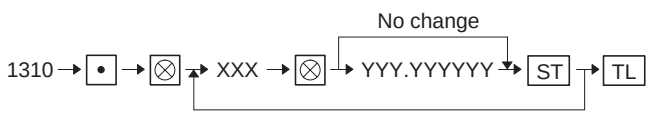

XXX: Function No.

YYY.YYYYYY: Exchange (EURO) rate

Function No.	Function	Entry range	Remarks
52	Exchange 1	0 to 999.999999 (3 id + 6 dd)	Exchange (EURO) rate
53	Exchange 2		
54	Exchange 3		

2) Programming of text for Exchange keys

[JOB#2314]

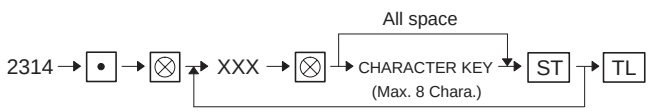

XXX: Function No.

Function No.	Function	Default (MRS)
140	EXCHANGE1 CHECK+CREDIT SALES	EX1CH+CR
141	DOMESTIC CURRENCY FOR EX1 CH+CR	DOM.CUR1

3) Programming of currency symbol for Exchange keys

[JOB#2334]

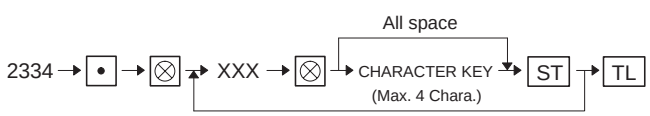

∗ EURO character code = 207

XXX: Function No.

Function No.	Function	Default (MRS)
52	Exchange 1	"SPACE"
53	Exchange 2	"SPACE"
54	Exchange 3	"SPACE"
55	Exchange 4	"SPACE"

4) Programming of EURO functions

[JOB#2616-X9] MRS=00000000

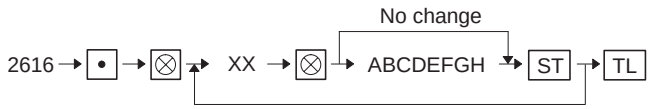

X:9

A: Not used (Fixed at "0")

B:

EXCHANGE1 Calculation method	B
Multiplication	0
Division	1

C:

CHECK, CREDIT operation for EX1	C
No	0
Yes	1

D:

Printing of EX1 amount for Total and Change	D
No	0
Yes	1

E:

Printing of EX1 amount for Total VP	E
No	0
Yes	1

F, G: Not used (Fixed at "00")

H (For ER-A440): Not used (Fixed at "0")

H (For ER-A450):

Footer graphic LOGO printing at the end of receipt	H
No	0
Yes	1

5) Programming of Exchange drawer

[JOB#2680] MRS=0

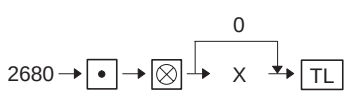

X:

EXCHANGE DRAWER No.	X
Non	0
#1	1
#2	2

6) Programming of Tablation for Exchange keys

[JOB#2330] MRS = 2

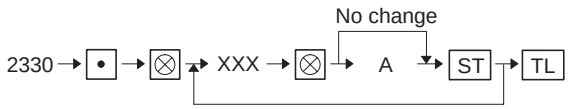

XXX: Function No.

Function No.	Function
52	Exchange 1
53	Exchange 2
54	Exchange 3
55	Exchange 4

A: TAB

TAB	A
0	0
0.0	1
0.00	2
0.000	3

2. ER-A460/A470

1-1. SERVICE MODE PROGRAMMING

Domestic currency symbol programming

[JOB#915] MRS=1020

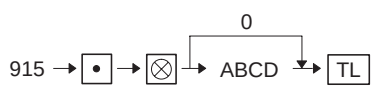

#915-A: 1. Amount symbol

1. Amount symbol	915-A	
"$"	0	
"＊"	1	★
"_"	2	
"EURO SYMBOL"	3	

#915-B: Not used (Fixed at "0")

#915-C: 1. Paper near end check

2. ST(–), ST(%) as many times needed/operation only once

1. Paper near end check	2. ST(–), ST(%) as many times needed/operation only once	915-B	
Yes	Unlimited	0	
	Once only	2	★
No	Unlimited	4	
	Once only	6	

#915-D: Not used (Fixed at "0")

1-2. PGM MODE PROGRAMMING

1) Programming of Exchange (EURO) rate

[JOB#1310] MRS=0

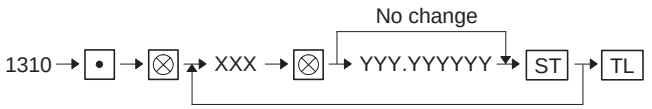

XXX: Function No.

YYY.YYYYYY: Exchange (EURO) rate

Function No.	Function	Entry range	Remarks
51	Exchange 1	0 to 999.999999 (3 id + 6 dd)	Exchange (EURO) rate
52	Exchange 2		
53	Exchange 3		

2) Programming of text for Exchange keys

[JOB#2314]

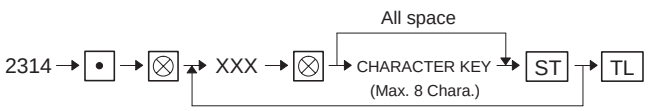

XXX: Function No.

Function No.	Function	Default (MRS)
127	EXCHANGE1 CHECK+CREDIT SALES	EX1CH+CR
128	DOMESTIC CURRENCY FOR EX1 CH+CR	DOM.CUR1

3) Programming of EURO functions

[JOB#2680] MRS=000002

A:

Printing of EX1 amount for Total and Change	A
No	0
Yes	1

B:

Printing of EX1 amount for Total VP	B
No	0
Yes	1

C:

CHECK, CREDIT operation for EX1	C
No	0
Yes	1

D:

EXCHANGE1 Calculation method	D
Multiplication	0
Division	1

E:

EXCHANGE DRAWER No.	E
Non	0
#1	1
#2	2

F:

Currency symbol for EX1 key	F
"$"	0
"*"	1
"_"	2
"EURO SYMBOL"	3

4) Programming of Tablation for Exchange keys

[JOB#2330] MRS = 2

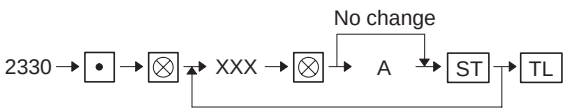

XXX: Function No.

Function No.	Function
51	Exchange 1
52	Exchange 2
53	Exchange 3
54	Exchange 4

A: TAB

TAB	A
0	0
0.0	1
0.00	2
0.000	3

3. ER-A490

1-1. SERVICE MODE PROGRAMMING

1) Domestic currency symbol programming

[JOB#915] MRS=1020

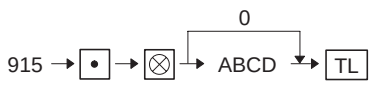

#915-A: 1. Printing of total amount at addition+single item receipt

2. Amount symbol

1. Printing of total amount at addition+single item receipt	2. Amount symbol	915-A	
Yes	"$"	0	
	"∗"	1	★
	"_"	2	
	"EURO SYMBOL"	3	
No	"$"	4	
	"∗"	5	
	"_"	6	
	"EURO SYMBOL"	7	

#915-B: 1. Printing of refund on the S/D receipt

2. PO system

1. Printing of refund on the S/D receipt	2. PO system	915-B	
No	Mixed entry	0	★
	Cash only entry	1	
Yes	Mixed entry	4	
	Cash only entry	5	

#915-C: 1. ST(–), ST(%) as many times needed/operation only once

2. RA system

1. ST(–), ST(%) as many times needed/operation only once	2. RA system	915-C	
Unlimited	Mixed entry	0	
	Cash only entry	2	★
Once only	Mixed entry	4	
	Cash only entry	6	

#915-D: 1. S/D receipts are issued by the number of a multiplier

2. Incrementing the consecutive number for each item in S/D+Addition receipt

3. Printing on S/D receipt for multiplication entry

1. S/D receipts are issued by the number of a multiplier	2. Incrementing the con-secutive number for each item in S/D+Addition receipt	3. Printing on S/D receipt for multiplication entry	915-C	
No	No	One line	0	
		Normal	1	
	Yes	One line	2	★
		Normal	3	
Yes	No	One line	4	
		Normal	5	
	Yes	One line	6	
		Normal	7	

1-2. PGM MODE PROGRAMMING

1) Programming of Exchange (EURO) rate

[JOB#1310] MRS=0

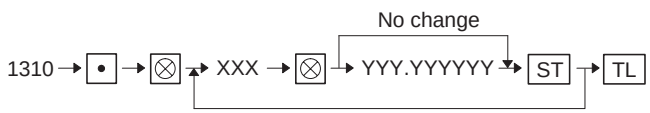

XXX: Function No.

YYY.YYYYYY: Exchange (EURO) rate

Function No.	Function	Entry range	Remarks
60	Exchange 1	0 to 999.999999 (3 id + 6 dd)	Exchange (EURO) rate
61	Exchange 2		
62	Exchange 3		
63	Exchange 4		
64	Exchange 5		
65	Exchange 6		
66	Exchange 7		
67	Exchange 8		
68	Exchange 9		

2) Programming of text for Exchange keys

[JOB#2314]

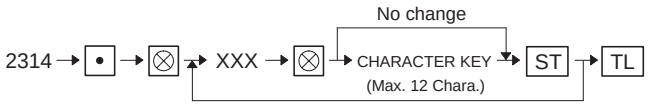

XXX: Function No.

Function No.	Function	Default (MRS)
276	EXCHANGE1 CHECK+CREDIT SALES	EX1CH+CR
277	DOMESTIC CURRENCY FOR EX1 CH+CR	DOM.CUR1

3) Programming of EURO functions

[JOB#2680] MRS=000002

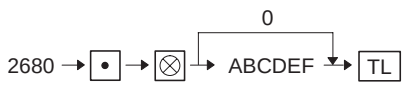

A:

Printing of EX1 amount for Total and Change	A
No	0
Yes	1

B:

Printing of EX1 amount for Total VP	B
No	0
Yes	1

C:

CHECK, CREDIT operation for EX1	C
No	0
Yes	1

If "CHECK, CREDIT operation for EX1" is select at "Yes", it needs a few seconds until terminating this job because ER-A490 creates new records which is used by new function in the transaction and cashier files at this JOB. It may be occurred the MEMORY FULL error. In this case, it must be change the file allocation (ex. decrease PLU records) at SRV mode programming (JOB#971).

D:

EXCHANGE1 Calculation method	D
Multiplication	0
Division	1

E:

EXCHANGE DRAWER No.	E
Non	0
#1	1
#2	2

F:

Currency symbol for EX1 key	F
"$"	0
"＊"	1
"_"	2
"EURO SYMBOL"	3

4) Programming of Tablation for Exchange keys

[JOB#2330] MRS = 2 (Same as SRV#902-D)

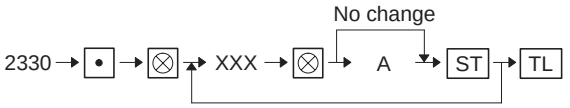

XXX: Function No.

Function No.	Function
60	Exchange 1
61	Exchange 2
62	Exchange 3
63	Exchange 4
64	Exchange 5
65	Exchange 6
66	Exchange 7
67	Exchange 8
68	Exchange 9

A: TAB

TAB	A
0	0
0.0	1
0.00	2
0.000	3

4. ER-A550S

1-1. SERVICE MODE PROGRAMMING

1) Domestic currency symbol programming

[JOB#915] MRS=1020

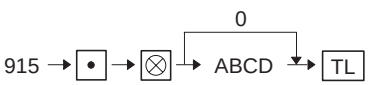

#915-A: 1. Amount symbol

1. Amount symbol	915-A	
"$"	0	
"＊"	1	★
"_"	2	
"EURO SYMBOL"	3	

#915-B: Not used (Fixed at "0")

#915-C: 1. ST(–), ST(%) as many times needed/operation only once

1. ST(–),ST(%) as many times needed/operation only once	915-B	
Unlimited	0	
Once only	2	★

#915-D: Not used (Fixed at "0")

1-2. PGM MODE PROGRAMMING

1) Programming of Exchange (EURO) rate

[JOB#1310] MRS=0

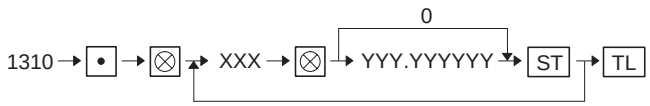

XXX: Function No.

YYY.YYYYYY: Exchange (EURO) rate

Function No.	Function	Entry range	Remarks
51	Exchange 1	0 to 999.999999 (3 id + 6 dd)	Exchange (EURO) rate
52	Exchange 2		
53	Exchange 3		

2) Programming of text for Exchange keys

[JOB#2314]

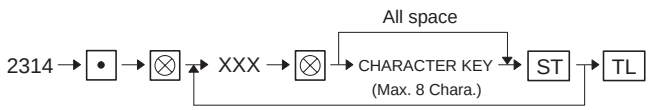

XXX: Function No.

Function No.	Function	Default (MRS)
119	EXCHANGE1 CHECK+CREDIT SALES	EX1CH+CR
120	DOMESTIC CURRENCY FOR EX1 CH+CR	DOM.CUR1

3) Programming of EURO functions

[JOB#2680] MRS=000002

A:

Printing of EX1 amount for Total and Change	A
No	0
Yes	1

B:

Printing of EX1 amount for Total VP	B
No	0
Yes	1

C:

CHECK, CREDIT operation for EX1	C
No	0
Yes	1

D:

EXCHANGE1 Calculation method	D
Multiplication	0
Division	1

E:

EXCHANGE DRAWER No.	E
Non	0
#1	1
#2	2

F:

Currency symbol for EX1 key	F
"$"	0
"＊"	1
"_"	2
"EURO SYMBOL"	3

4) Programming of Tablation for Exchange keys

[JOB#2330] MRS = 2

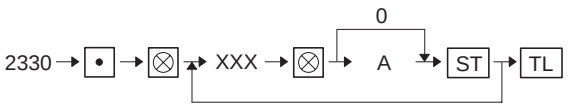

XXX: Function No.

Function No.	Function
51	Exchange 1
52	Exchange 2
53	Exchange 3
54	Exchange 4

A: TAB

TAB	A
0	0
0.0	1
0.00	2
0.000	3

5. ER-A570/A610

1-1. SERVICE MODE PROGRAMMING

1) Domestic currency symbol programming

[JOB#915] MRS=1020

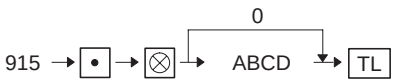

#915-A: 1. Amount symbol

1. Amount symbol	915-A	
"$"	0	
"＊"	1	★
"_"	2	
"EURO SYMBOL"	3	

#915-B: 1. PO system

1. PO system	915-B	
Mixed entry	0	★
Cash only entry	1	

#915-C: 1. ST(–), ST(%) as many times needed/operation only once

2. RA system

1. ST(–), ST(%) as many times needed/operation only once	2. RA system	915-C
Unlimited	Mixed entry	0
	Cash only entry	1 ★
Once only	Mixed entry	2
	Cash only entry	3

#915-D: Not used (Fixed at "0")

1-2. PGM MODE PROGRAMMING

1) Programming of Exchange (EURO) rate

[JOB#1310] MRS=0

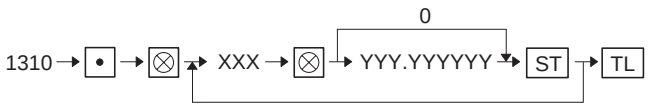

XXX: Function No.

YYY.YYYYYY: Exchange (EURO) rate

Function No.	Function	Entry range	Remarks
68	Exchange 1	0 to 999.999999 (3 id + 6 dd)	Exchange (EURO) rate
69	Exchange 2		
70	Exchange 3		
71	Exchange 4		
72	Exchange 5		
73	Exchange 6		
74	Exchange 7		
75	Exchange 8		
76	Exchange 9		

2) Programming of text for Exchange keys

[JOB#2314]

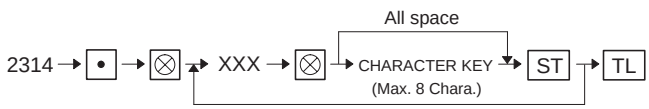

XXX: Function No.

<For ER-A570/610>

Function No.	Function	Default (MRS)
305	EXCHANGE1 CHECK+CREDIT SALES	EX1CH+CR
306	DOMESTIC CURRENCY FOR EX1 CH+CR	DOM.CUR1

3) Programming of EURO functions

[JOB#2680] MRS=000002

A:

Printing of EX1 amount for Total and Change	A
No	0
Yes	1

B:

Printing of EX1 amount for Total VP	B
No	0
Yes	1

C:

CHECK, CREDIT operation for EX1	C
No	0
Yes	1

D:

EXCHANGE1 Calculation method	D
Multiplication	0
Division	1

E:

EXCHANGE DRAWER No.	E
Non	0
#1	1
#2	2

F:

Currency symbol for EX1 key	F
"$"	0
"＊"	1
"_"	2
"EURO SYMBOL"	3

4) Programming of Tablation for Exchange keys

[JOB#2330] MRS = 2

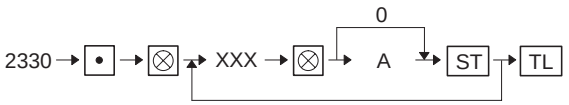

XXX: Function No.

Function No.	Function
68	Exchange 1
69	Exchange 2
70	Exchange 3
71	Exchange 4
72	Exchange 5
73	Exchange 6
74	Exchange 7
75	Exchange 8
76	Exchange 9

A: TAB

TAB	A
0	0
0.0	1
0.00	2
0.000	3

SHARP SERVICE MANUAL

CODE: 00ZERA46VOSME

ER-A460/A470 OPTION

RS-232 INTERFACE
ER-A5RS
CONTROL ROM
MODEL ER-A46R1

(For "V" version)

CONTENTS

I. RS-232 SYSTEM FOR ER-A460/A470 1-1
II. TEST FUNCTION FOR ER-A5RS 2-1
IV. HARDWARE DESCRIPTION FOR ER-A5RS 3-1
PARTS GUIDE

Parts marked with "⚠" is important for maintaining the safety of the set. Be sure to replace these parts with specified ones for maintaining the safety and performance of the set.

SHARP CORPORATION

This document has been published to be used for after sales service only.
The contents are subject to change without notice.

I. RS-232 SYSTEM FOR ER-A460/A470

ER-A5RS
MODEL ER-A46R1 (For ER-A460/A470)

(OPTION FOR ER-A460/A470)

CONTENTS

CHAPTER 1. GENERAL 1-2
CHAPTER 2. COMPONENTS 1-2
CHAPTER 3. SPECIFICATIONS OF RS-232 INTERFACE 1-2
CHAPTER 4. BLOCK DIAGRAM AND SYSTEM CONFIGURATION 1-3
CHAPTER 5. SIGNAL CONNECTION DIAGRAM 1-3
CHAPTER 6. RS-232 PROTOCOL 1-5
CHAPTER 7. CONTROL SIGNAL SEQUENCE 1-12
CHAPTER 8. DATA BLOCK FORMAT 1-15
CHAPTER 9. RS-232 APPLICATION 1-15

■ WHAT IS AN RS-232 INTERFACE?

- EIA (Electronics Industries Association) standard RS-232 is associated with the transfer of binary serial data, control signals and timing signals between modems and data terminals.
- The RS-232 interface is one of the devices generally used for the exchange of information between a computer and a peripheral device.
- This interface (ER-A5RS) was designed to conform to the EIA standard, but in particular it was designed for connection between the ER-A460/A470 and a data processing machine.
- It becomes necessary to set communication specifications of the ER-A5RS (e.g. baud rate) matched to those of the data processing machine, when the ER-A5RS is connected with a data processing machine that is equipped with the RS-232 interface.
- The Dip switch on the ER-A5RS interface circuit board must be used to choose the specifications.
- Refer to Section 3 "RS-232 Interface Specifications" for details of communication specifications.

CHAPTER 1. GENERAL

This option (ER-A46R1 and ER-A5RS) is the RS-232 interface option for the ER-A460/A470 cash register. It enables the ER-A570 to perform on-line data communications.
When this option is used for on-line data communications, the ER-A570 can be connected to a host computer. Also, their connection can be made via modems.
When this option is used together with a multiplexer (to be procured in the market), it allows the host computer to be connected to more than one ER-A570.

CHAPTER 2. COMPONENTS

ER-A5RS

NO	NAME	PARTS CODE	Q'ty
1	PWB UNIT	CPWBS7292RC01	1
2	BRACKET	LANGT7466RCSA	1
3	SCREW (FOR PWB AND BRACKET)	LX-BZ6665RCZZ	2
4	SCREW (FOR HOLDING OF THE PWB BRACKET, AND BRACKET TO BRACKET)	LX-BZ6774RCZZ	3
5	SCREW (FOR HOLDING OF THE RS-232 CABLE CORE)	XHBSD30P08000	2
6	WIRING TIE	LBNDJ2004SCZZ	1
7	CLAMP (FOR RS-232 CABLE)	LHLDW6814RCZZ	2
8	SPACER	PSPAN7039XCZZ	1
9	FERRITE CORE (FOR EXTERNAL CABLE)	RCORF6658RCZZ	2

CHAPTER 3. SPECIFICATIONS OF RS-232 INTERFACE

1. Online interface

a) Interface : RS-232
b) Duplex type : Half-duplex / Full-duplex
c) Line configuration : Direct connection/Modem connection
d) Data rate : 19200, 9600, 4800, 2400, 1200, 600 and 300 bps (Programable)
e) Synchronizing mode : Asynchronous
f) Parity check : Vertical parity check (odd)
g) Code : ASCII
h) Bit sequence : LSB first
i) Data format : 1 start bit + 7 data bits + 1 parity + 1 stop bit

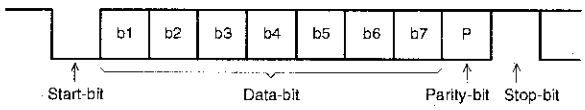

j) Protocol : Polling/selecting (Simple procedure)
k) Transmission line :
Cable : Shielded cable
Connector (ECR side) : D-sub 9 pin (female type) connector Inch pitch (4-40 UNC) lock screw
Connector cover : Shielded cover

The table shows the relationship between the data rate and the recommended cable length.

Data rate	Recommended cable length
19,200 bps	3.75 meters
9,600 bps	7.5 meters
4,800 bps	15 meters
2,400 bps	30 meters
1,200 bps	60 meters

CHAPTER 4. BLOCK DIAGRAM AND SYSTEM CONFIGURATION

1. System Configuration

1) On-line data communication

On-line data communication is allowed only when the ER-A460/A470 is a stand-alone machine or an in-line master. The protocol is the simple procedure. (The on-line option is not usable if the ER-A460/A470 is an in-line satellite.)

① Direct connection

a) One-to-one connection

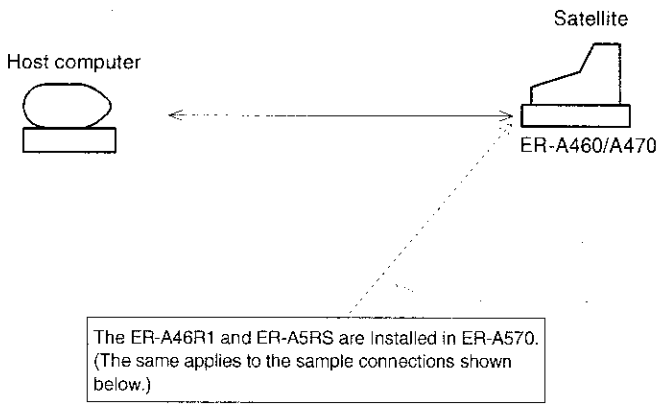

② Connection via modems

a) One-to-one connection

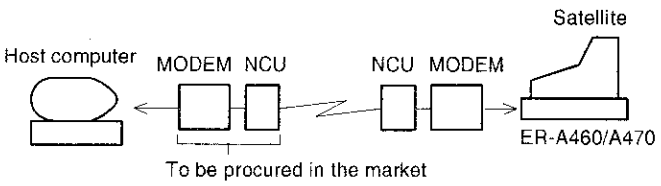

CHAPTER 5. SIGNAL CONNECTION DIAGRAM

1. Connection between the master (Host) and Satellite

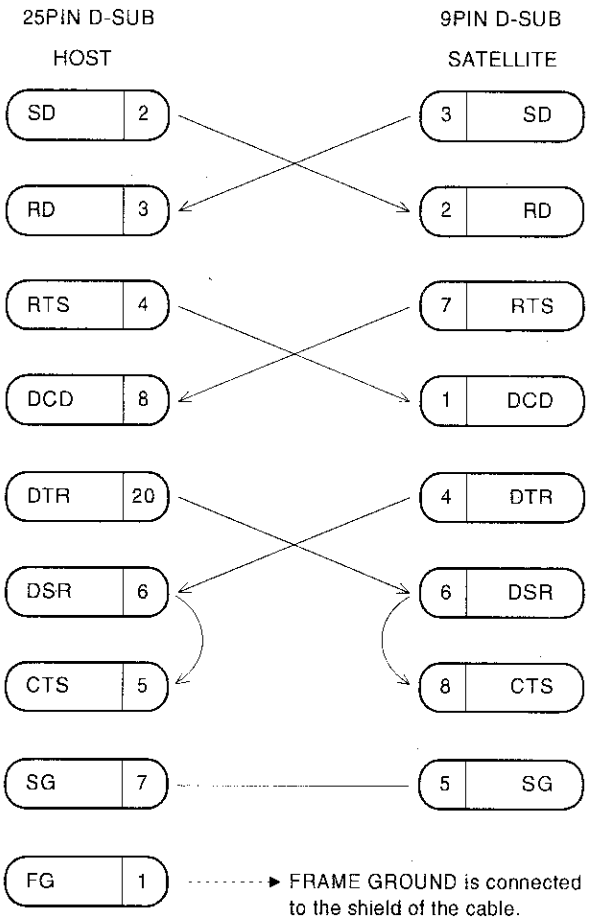

SD : TRANSMITTED DATA
RD : RECEIVED DATA
DTR : DATA TERMINAL READY
DSR : DATA SET READY
RTS : REQUEST TO SEND
DCD : DATA CARRIER DETECTOR
CTS : CLEAR TO SEND
FG : FRAME GROUND

* If the connector of Host side is "9 PIN D-SUB", the pin number is same as Satellite side.

2. Connection between the terminal and MODEM

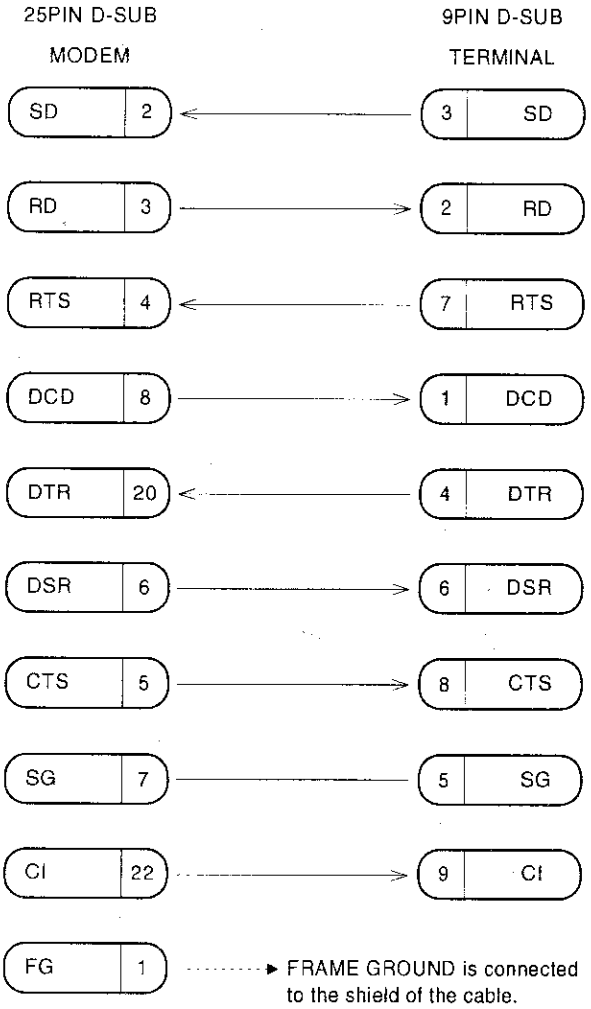

SD : TRANSMITTED DATA
RD : RECEIVED DATA
DTR : DATA TERMINAL READY
DSR : DATA SET READY
RTS : REQUEST TO SEND
DCD : DATA CARRIER DETECTOR
CTS : CLEAR TO SEND
CI : CALLING INDICATOR
FG : FRAME GROUND

CHAPTER 6. RS-232 PROTOCOL

1. Basic protocol specification

1) Data transmission from the host to a satellite

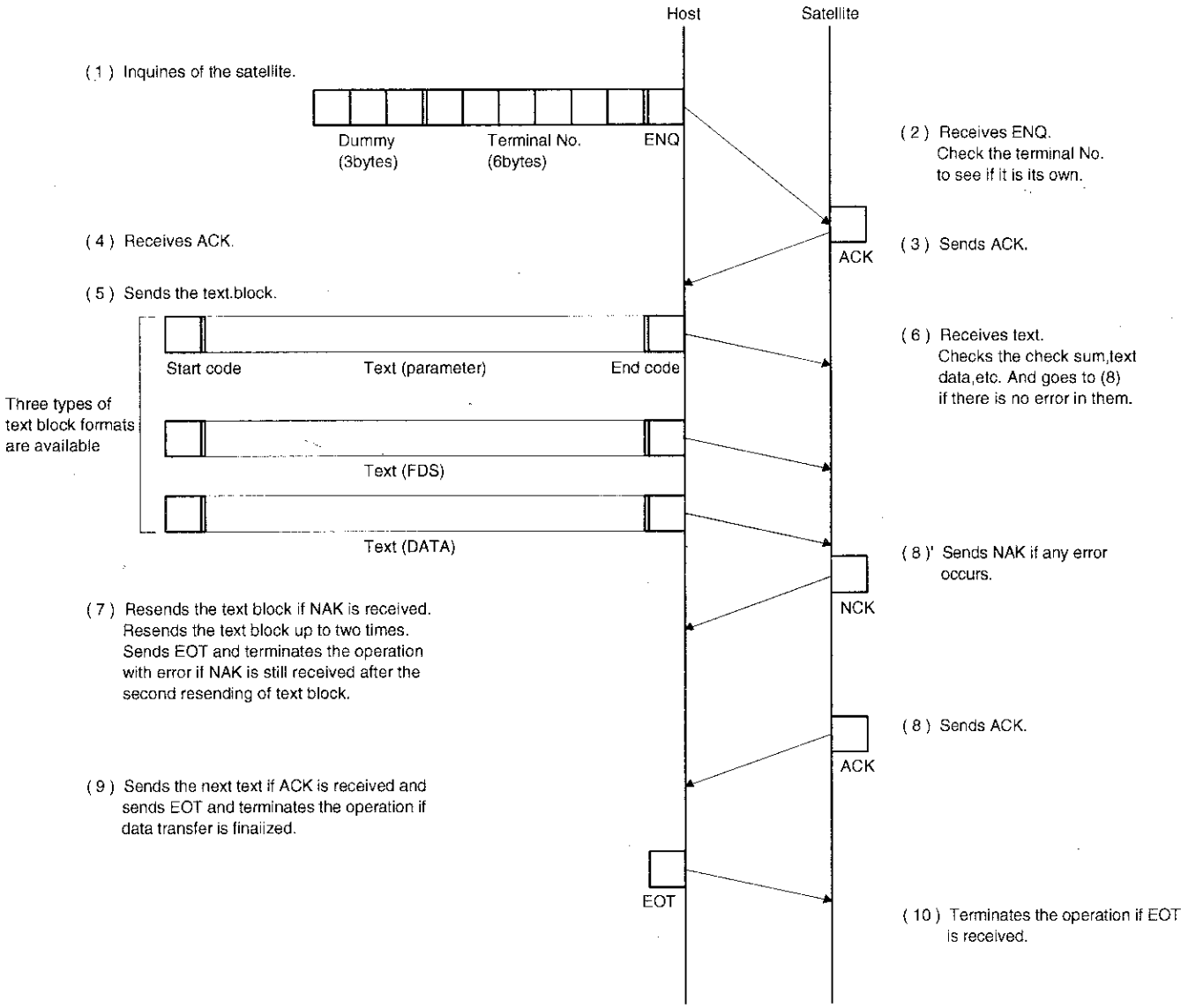

2) Data transmission from satellite to the host

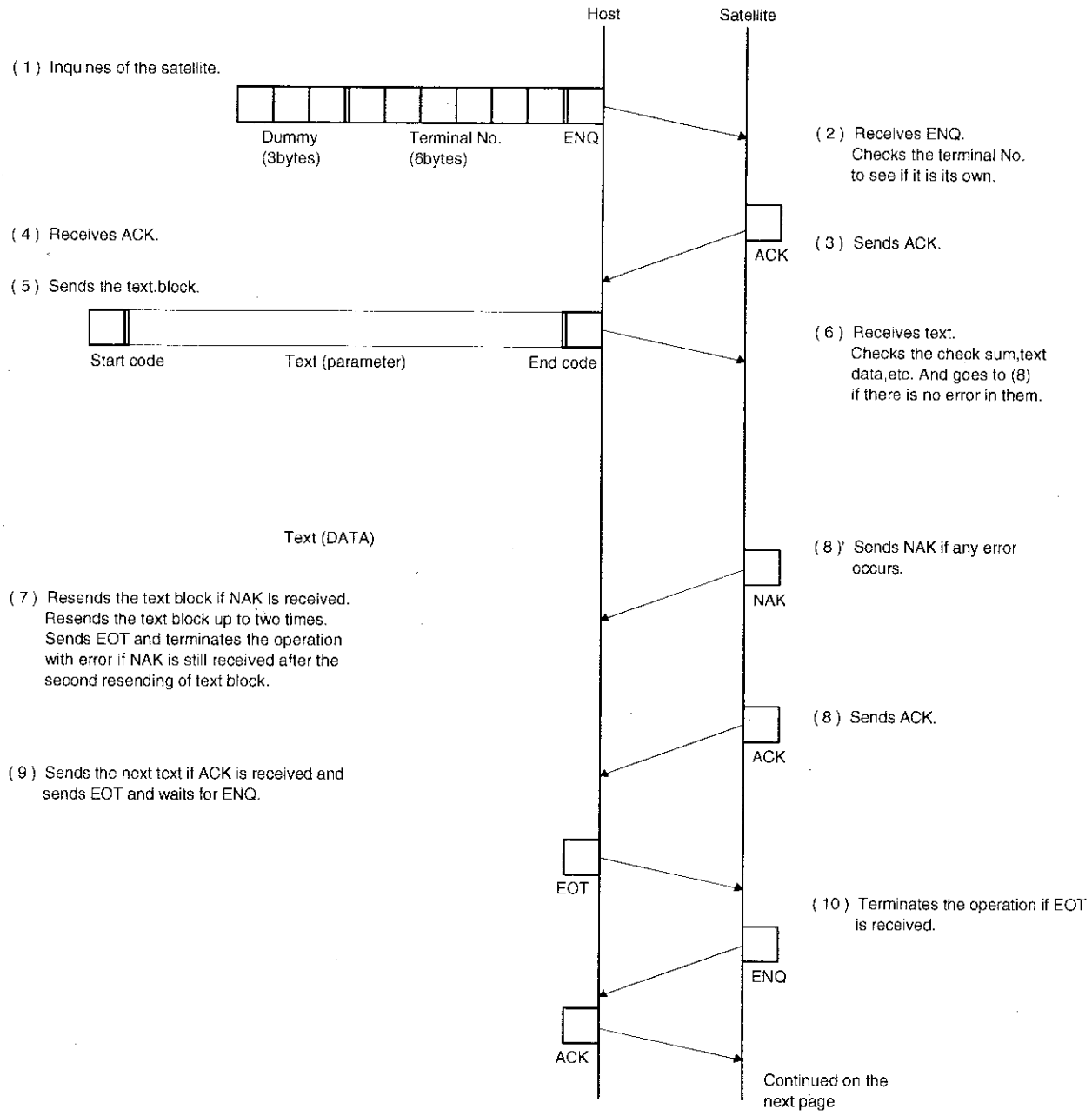

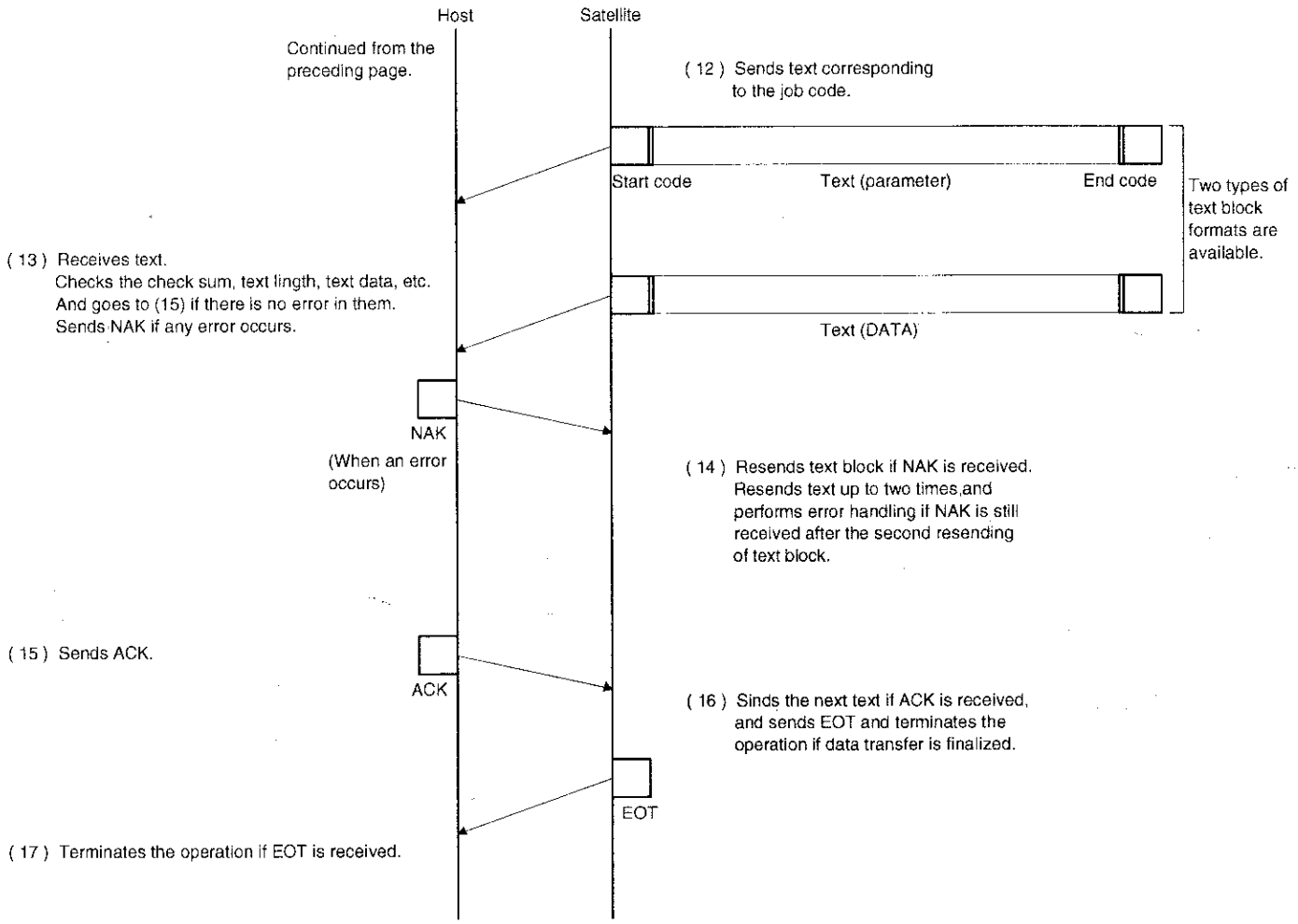

Note : For the description of each data block see section 4 (Text block formats)

2. Transmission control procedure matrix

1) Down-loading matrix for the host

STATE / EVENT	Initial	After sending ID ENQ	After sending text
	0	1	2
ENQ	—	—	—
ACK	—	Sends text and goes to 2.	Sends text and goes to 2. Sends EOT and then goes to 0. (Normal end)
NAK	—	—	Resends the text and then goes to 2. If the host has resent the text two times, it sends EOT and goes to 0. (ERROR END)
EOT	—	—	The host goes to 0. (ERROR END)
TEXT	—	—	—
TIME-UP	—	Resends ID ENQ and then goes to 1. If the host has resent ID ENQ two times,it sends EOT and goes to 0. (ERROR END)	Resends the text and then goes to 2. If the host has resent the text two times,it sends EOT and goes to 0. (ERROR END)
KEY ENTRY	Sends ID ENQ and goes to 1.	—	—

Time-up: One second after sending of ID ENQ.
Four seconds after sending of text.

2) Up-loading matrix for the host

STATE / EVENT	Initial	After sending ID ENQ	After sending text
	0	1	2
ENQ	—	—	—
ACK	—	Sends text and goes to 2.	Sends EOT and goes to 3.
NAK	—	—	Resends the text and then goes to 2. If the host has resent the text two times, it goes to 0. (ERROR END)
EOT	—	—	The host goes to 0. (ERROR END)
TEXT	—	—	—
TIME-UP	—	Resends ID ENQ and then goes to 1. If the host has resent ID ENQ two times, it goes to 0. (ERROR END)	Resends the text and then goes to 2. If the host has resent the text two times, it goes to 0. (ERROR END)
KEY ENTRY	Sends ID ENQ and goes to 1.	—	—

Time-up: One second after sending of ID ENQ.
Four seconds after sending of text.

STATE / EVENT	After sending EOT	After sending ACK	After sending NAK
	3	4	5
ENQ	Sends ACK and goes to 4.	After the host has received ENQ, resends ACK and goes to 4. After the host has received TEXT, ignores the ENQ.	—
ACK	—	—	—
NAK	—	—	—
EOT	The host goes to 0 (ERROR END)	After the host has received TEXT, goes to 0. (Normal end) After the host has received ENQ, goes to 0.(ERROR END)	The host goes to 0. (ERROR END)
TEXT	—	The host checks the text block, if the block is correct, the host sends ACK and goes to 4. If it is not correct, the host sends NAK and goes to 5. If transmission cannot be continued, the host sends EOT and goes to 0.	The host checks the checks the text block, if the block is correct, the host sends ACK and goes to 4. If it is not correct, the host sends NAK and goes to 5. If transmission cannot be continued, the host sends EOT and goes to 0. (ERROR END)
TIME-UP	Resends EOT and goes to 3. If the host has resent the EOT two times, it goes to 0. (ERROR END)	The host goes to 0. (ERROR END) Time-up is 7 seconds	The host goes to 0. (ERROR END) Time-up is 7 seconds
KEY ENTRY	—	—	—

Time-up: Two second after sending of EOT.

3) Down-loading matrix for the sattelite

STATE / EVENT	Initial	After sending ACK	After sending NAK
	0	1	2
ID-ENQ	Satellite checks the terminal No.:If it is correct, satellite sends ACK and goes to 1. If it is not correct, Satellite ignores the ID-ENQ.	Satellite checks the terminal No.:If it is correct, satellite sends ACK and goes to 1. If it is not correct, Satellite ignores the ID-ENQ.	—
ACK	—	—	—
NAK	—	—	—
EOT	—	After satellite has received TEXT, goes to 0. (Normal end) Before satellite has received TEXT, ignores the EOT	Satellite goes to 0. (ERROR END)
TEXT	—	Satellite checks the text block, if the block is correct, Satellite sends ACK and goes to 1. If it is not correct, satellite sends NAK and goes to 2. If transmission cannot be continued, satellite sends EOT and goes to 0. (ERROR END)	Satellite checks the text block, if the block is correct, Satellite sends ACK and goes to 1. If it is not correct, satellite sends NAK and goes to 2. If transmission cannot be continued, satellite sends EOT and goes to 0. (ERROR END)
TIME-UP	—	Satellite sends EOT, and goes to 0. (ERROR END) Time-up is 7 seconds	The host goes to 0. (ERROR END) Time-up is 7 seconds

4) Up-loading matrix for the satellite

STATE / EVENT	Initial	After receiving ID-ENQ and sending ACK.	After sending NAK
	0	1	2
ID-ENQ	Satellite checks the terminal No.:If it is correct, satellite sends ACK and goes to 1. If it is not correct, satellite ignores the ID-ENQ.	Satellite checks the terminal No.:If it is correct, satellite sends ACK and goes to 1. If it is not correct, satellite ignores the ID-ENQ.	—
ACK	—	—	—
NAK	—	—	—
EOT	—	—	Satellite goes to 0. (ERROR END)
TEXT	—	Satellite checks the text block, if the block is correct, satellite sends ACK and goes to 3. If it is not correct, Satellite sends NAK and goes to 2. If transmission cannot be continued, satellite sends EOT and goes to 0. (ERROR END)	Satellite checks the text block, if the block is correct, Satellite sends ACK and goes to 3. If it is not correct, Satellite sends NAK and goes to 2. If transmission cannot be continued, satellite sends EOT and goes to 0. (ERROR END)
TIME-UP	—	Satellite goes to 0. (ERROR END) Time-up is 7 seconds	Satellite goes to 0. (ERROR END) Time-up is 7 seconds

STATE / EVENT	After receiving text and sending ACK	After sending ENQ	After sending TEXT
	3	4	5
ID-ENQ	—	—	—
ACK	—	Satellite sends the text and goes to 5.	Satellite sends the text and goes to 5, or sends the EOT and goes to 0. (Normal END)
NAK	—	—	Resends the text and then goes to 5. If satellite has resent the text two times, sends EOT and goes to 0. (ERROR END)
EOT	Satellite sends ENQ and goes to 4.	Resends the ENQ and then goes to 4. If Satellite has resent the ENQ two times, sends EOT and goes to 0. (ERROR END)	Satellite goes to 0. (ERROR END)
TEXT	Satellite checks the text block, if the block is correct, satellite sends ACK and goes to 3. If it is not correct, satellite sends NAK and goes to 2. If transmission cannot be continued, satellite sends EOT and goes to 0. (ERROR END)	—	—
TIME-UP	The host goes to 0. (ERROR END) Time-up is 7 seconds	Resends the ENQ and then goes to 4. If satellite has resent the ENQ two times, sends EOT and goes to 0. (ERROR END)	Resends the text and then goes to 5. If satellite has resent the text two times, sends EOT and goes to 0. (ERROR END)

Time-up: Four seconds after sending of text.
Two second after sending of ENQ.

CHAPTER 7. CONTROL SIGNAL SEQUENCE

1. Online transmission

1) Half duplex transmission

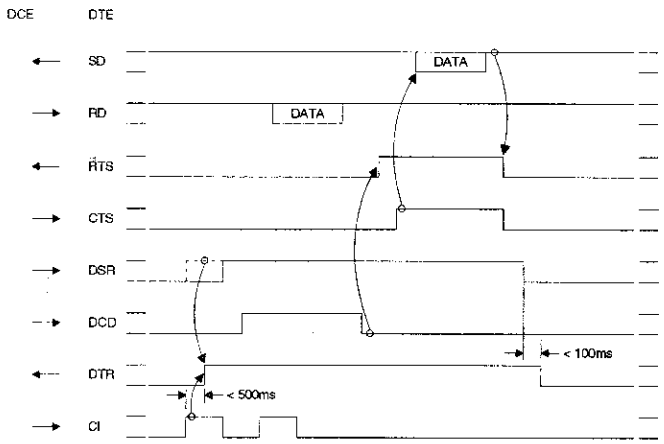

2) Full duplex transmission

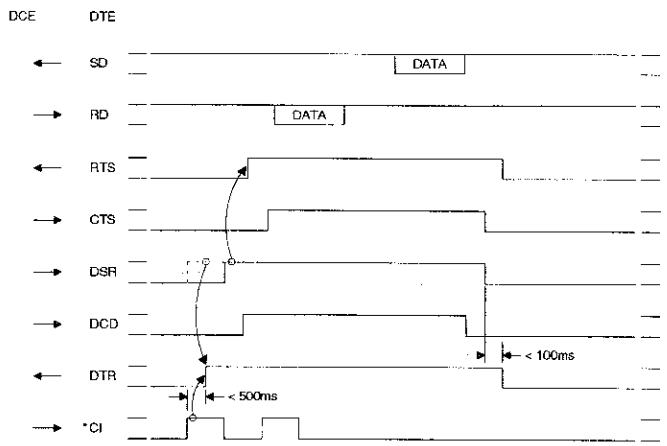

*Note: In the direct connect mode, same as full duplex control, but the CI signal is not controlled.

3) Line connection sequence flow

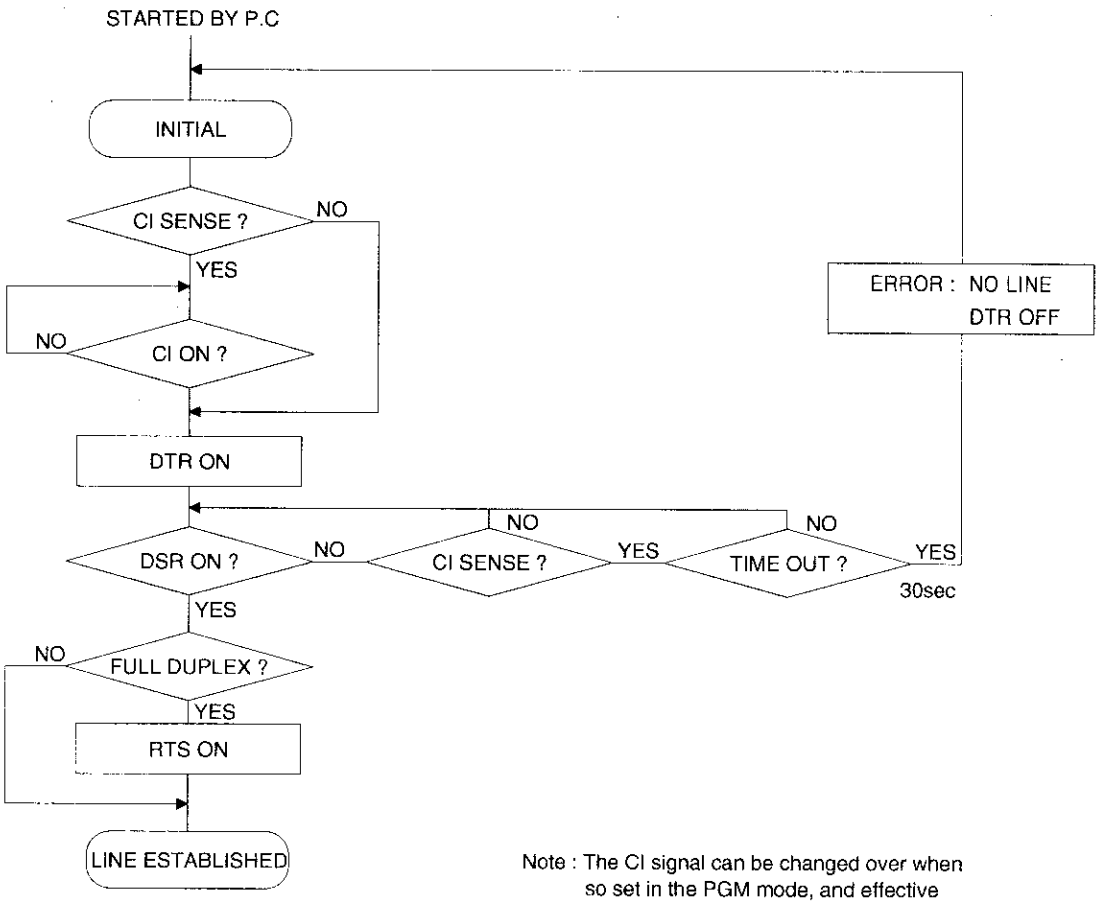

Note : The CI signal can be changed over when so set in the PGM mode, and effective at ECR side.

4) Transmission sequence flow

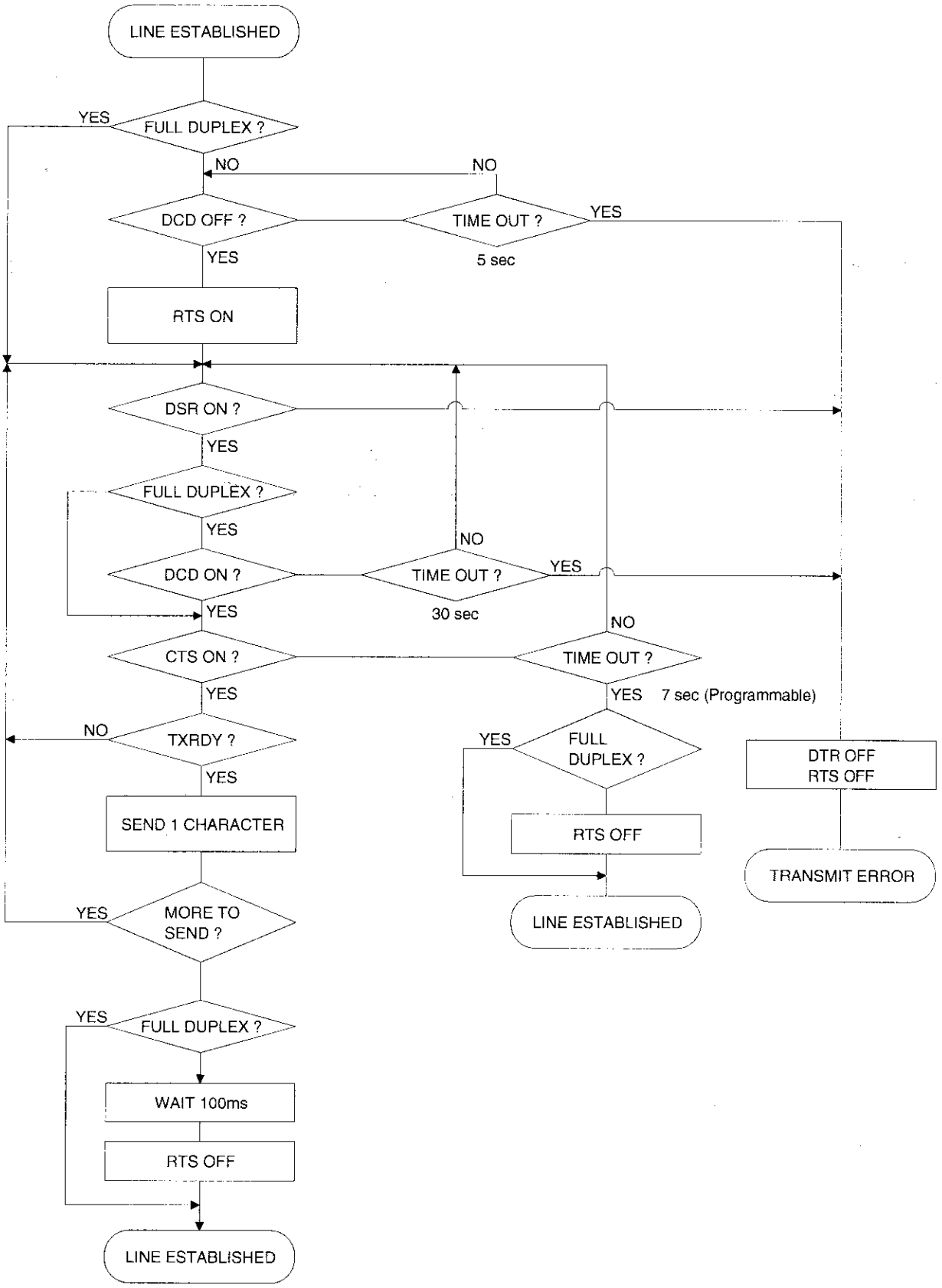

5) Receiving sequence flow

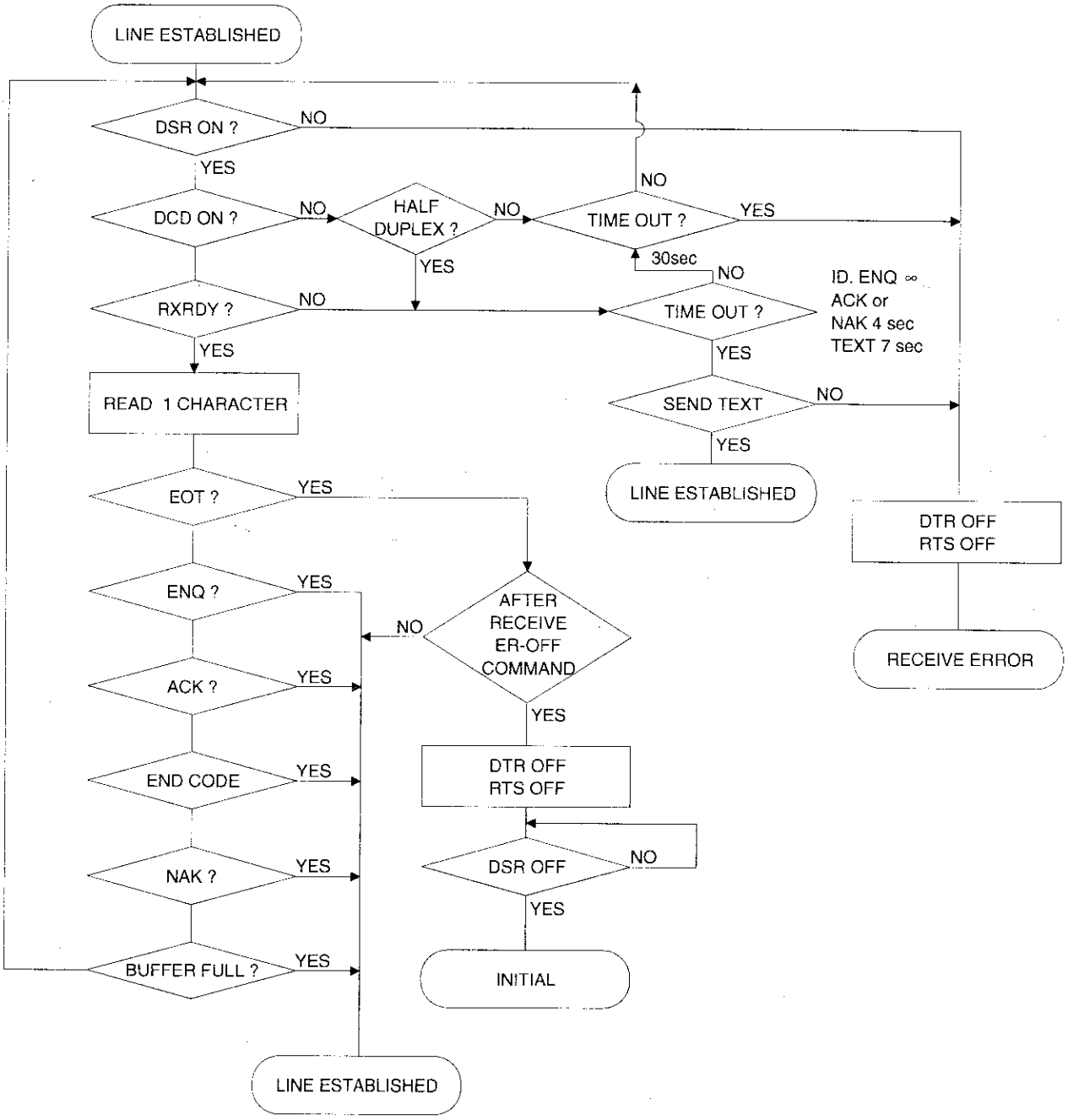

CHAPTER 8. DATA BLOCK FORMAT

1. Basic format

1) ID-ENQ :

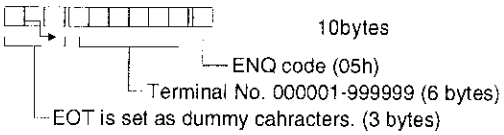

2) ACK : 1 byte 06h

3) NAK : 1 byte 15h

4) EOT : 1 byte 04h

5) ENQ : 1 byte 05h

6) TEXT :

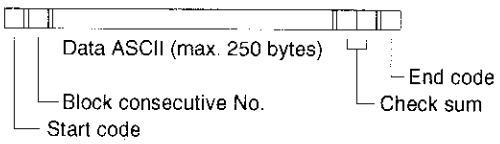

Start code : This code may not be provided. Null is impermissible.

End code : This code may not be provided. Null or any same code as the start code is not permissible.

When master reset is performed, the default is assumed:

Start code = 02h
End code = 0Dh

Block consecutive No. : This number starts with 30h and cycles like this: 30h, 31h — 39h, 30h, 31h (Ring counter system)

Check sum : 2 bytes hex number
Low-order 8-bit data of the complement of 2 for the sum of text data.

RAM data: : Even number of data that is obtained by dividing one byte of RAM data into high-order 4 bits and low-order 4 bits and converting them to ASCII codes shown in the code conversion table.

Code conversion table .

Print code (high-order or low-order 4 bits)		Line image
Bit image	Hexadecimal	ASCII
0000	0	30h
0001	1	31h
0010	2	32h
0011	3	33h
0100	4	34h
0101	5	35h
0110	6	36h
0111	7	37h
1000	8	38h
1001	9	39h
1010	A	41h
1011	B	42h
1100	C	43h
1101	D	44h
1110	E	45h
1111	F	46h

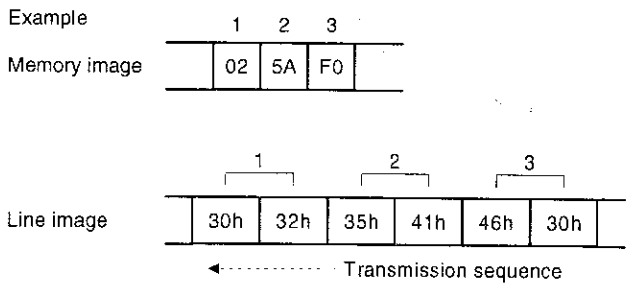

CHAPTER 9. RS-232 application

1. RS-232 preset

1) SRV programming

[JOB#945] MRS = 0000

The assignment of RS-232 channel by each devices.

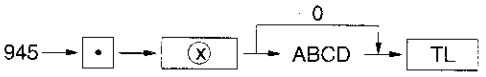

945-A: Channel No. for ONLINE = 0 to 7.
945-B, C, D: Not used (Fixed at "000")

* When channel No. for online is zero, online system is nothing.
* Do not select the same channel number for two or more devices.
* Use the switches on the I/F board to set the channel No. for the I/F board connector. (Refer to the RS-232 channel setting in IV. HARDWARE DESCRIPTION FOR ER-A5RS.)

2) PGM programming

Job#	PGM-MODE programming for online operation
6110	Programming of the terminal number
6111	Programming of the modem control
6112	Programming of the transmission data rate (Bau rate)
6113	Programming of the start and end code.
6115	Programming of time out value
6110	Online Preset reading

[JOB#6110] MRS = 000001

Programming of the terminal number

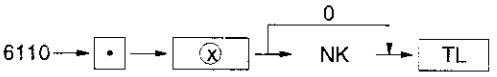

NK: Terminal No. = 0 to 999999

[JOB#6111] MRS = 00

Programming of the modem control

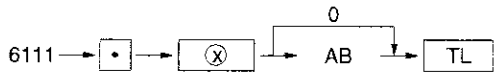

6111-A: 1. Sensing of the CI signal Yes/No

1. Sensing of the CI signal	6111-A
No	0
Yes	1

6111-B: 1. Duplex type

1. Duplex type	6111-B
Full duplex system	0
Half duplex system	1

[JOB#6112] MRS = 5

Programming of the transmission baud rate

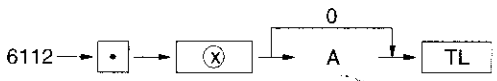

6112-A: Transmission baud rate

Transmission baud rate	6112-A
300 bps	0
600 bps	1
1200 bps	2
2400 bps	3
4800 bps	4
9600 bps	5
19200 bps	6

[JOB#6113] MRS = 002013

Programming of the start and end code

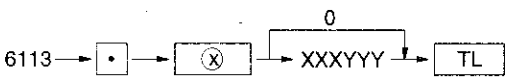

XXX: Start code = 02H (STX)
YYY: End code = 0DH (CR)

[JOB#6115] MRS = 007

Programming at the time-out value.

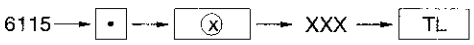

XXX: 1 ~ 255 sec

[JOB#6110]

Online preset reading

II. TEST FUNCTION FOR ER-A5RS

CHAPTER 1. General

This test program, is contained in the ER-A46R1 (option ROM), has been developed for the purpose of confirming the operations of the I/F board check conducted by the ER-A5RS mounted in the ER-A460/A470.

CHAPTER 2. Structure (RS-232 test & inline test)

① RS-232 test (RS-232 port test conducted by ER-A5RS
The following structure is required to execute RS-232 test program.

- ER-A460/A470
- ER-A5RS (I/F PWB Unit)
- Loopback connector for testing (UKOG-6705 RCZZ)
- ER-A46R1 (option control ROM)

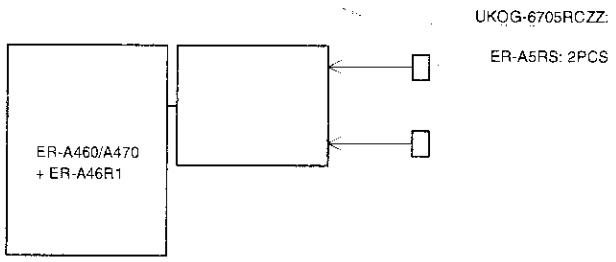

Diagram of the loopback connector

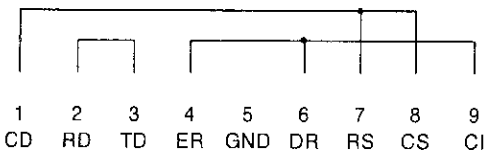

CHAPTER 3. Activation

This test program can be activated by inputting 3-digit number → [TL] with the mode switch in the "SRV" position.

CHAPTER 4. Test Job & Code

① RS-232 I/F check

JOB & CODE	Contents
500	Channel check
501	RS-232 channel 1 check
502	RS-232 channel 2 check
503	RS-232 channel 3 check
504	RS-232 channel 4 check
505	RS-232 channel 5 check
506	RS-232 channel 6 check
507	RS-232 channel 7 check

CHAPTER 5. Cautions

- Options should be installed with the power supply turned off.
- When setting the RS232C channels, avoid setting two or more ports to the same channel. The ER-A460/A470 allows installation of max. two units of the ER-A5RS. In this case also, avoid setting two ports of the ER-A5RS to the same channel. If not, the hardware may be damaged.
- Concerning the inspection items whose display formats are not presented in this test function, nothing appears on the display screen. (blank display)

CHAPTER 6. RS-232 Test

1. Channel check

① Activation
The program is activated by JOB#500
SRV mode: 500 → [TL]

② Contents to be tested
Information about connected RS-232 channel is printed.

Printing digit

21	20	19	18	17	16	15	3	2	1
CH7	CH6	CH5	CH4	CH3	CH2	CH1	5	0	0

CHn = 0 : Presence of channel
1 : Ansence of channel

③ Confirmed content
Printed contents and the setting of channel changeover switch on PWB are compared and confirmed.

④ Release
The program is terminated after the above contents are printed.

RS-232 channel setting (SW OFF: 1, SW ON: 0)

* Refer to the silk print on the I/F board.

ER-A5RS CN2				ER-A5RS CN1			
SW1			Channel	SW1			Channel
6	5	4		3	2	1	
0	0	0	Invalid	0	0	0	Invalid
0	0	1	Channel 1	0	0	1	Channel 1
0	1	0	Channel 2	0	1	0	Channel 2
0	1	1	Channel 3	0	1	1	Channel 3
1	0	0	Channel 4	1	0	0	Channel 4
1	0	1	Channel 5	1	0	1	Channel 5
1	1	0	Channel 6	1	1	0	Channel 6
1	1	1	Channel 7	1	1	1	Channel 7

2. RS-232 Channel 1 ~ 7 check

① Activation

The program is activated by JOB#501~507.

SRV mode: 501 → [TL] : Channel 1

502 → [TL] : Channel 2

503 → [TL] : Channel 3

504 → [TL] : Channel 4

505 → [TL] : Channel 5

506 → [TL] : Channel 6

507 → [TL] : Channel 7

② Contents to be tested

If the channel specified by JOB#CODE is not set, the machine performs the mis-operation processing. When the channel is set, the machine conducts the loop check concerning the channel specified by JOB#CODE by using the loopback connector.

The following three items are checked:

① Control signal check

② Data transfer check

③ Timer check (RS-232 onboard timer)

Check ① Control signal check ($\overline{ERn}$-$\overline{DRn}$•$\overline{CIn}$, $\overline{RSn}$-$\overline{CDn}$•$\overline{CSn}$ loop check)

OUTPUT		INPUT			
$\overline{ERn}$	$\overline{RSn}$	$\overline{DRn}$	$\overline{CIn}$	$\overline{CDn}$	$\overline{CSn}$
OFF	OFF	OFF	OFF	OFF	OFF
OFF	ON	OFF	OFF	ON	ON
ON	OFF	ON	ON	OFF	OFF
ON	ON	ON	ON	ON	ON

The read check about the above INPUT items and interrupt check of $\overline{CS}$, $\overline{CI}$ and $\overline{CD}$ are performed.

Read check: $\overline{ER}$ and $\overline{RS}$ are switched over in the order as shown in the above table to confirm the logic of $\overline{DR}$, $\overline{CI}$, $\overline{CD}$ and $\overline{CS}$.If the read logic is different from the one in the table, error print-outs occur.

Interrupt check: Allows the interruption of either of $\overline{CS}$, $\overline{CI}$ and $\overline{CD}$ one by one. (The mask is released.)
The interruption does not take place when each signal is turned on. Or if the interruption occurs when a signal is turned off, error print-outs occur.

Each of the above checks should be made in four cycles.

Note) $\overline{ERn}$ control selector jumper switch on the I/F board must be switched to the software control side.

Check ② Data transfer check (SDn-RDn loop check)
In this check, transfer 256-byte loopback data of $00 ~ $FF.

Note) The above check should be made with the baud rate set at 9600BPS.

Check ③ Timer check
Before making check ②, set the corresponding timer at 10ms for RCVDT activation, and check to see that:
1) $\overline{TRQ1}$ is not generated during the execution of check ②.
2) $\overline{TRQ1}$ is generated in 10msec. after check ② is finished.

③ Contents to be checked

If an error occurs during the above checks, following error print-outs occur. Even if an error occurs during check ①, the test is continued after the corresponding error print-out has occurred, but if an error occurs during the execution of check ② or ③, the test is terminated after the corresponding error print-out has occurred. Note that when check ①, ② or ③ terminates, the termination print-out occurs irrespective of any errors that have occurred during the check. (The program terminates normally only when no error print-out has occurred.)

ERROR	ERROR PRINT	Contents
1	E1-ER DR	$\overline{ERn}$-$\overline{DRn}$ ERR
2	E2-ER CI	$\overline{ERn}$-$\overline{CIn}$ ERR
3	E3-RS CD	$\overline{RSn}$-$\overline{CDn}$ ERR
4	E4-RS CS	$\overline{RSn}$-$\overline{CSn}$ ERR
5	E5-CI INT	Interruption error of $\overline{CIn}$
6	E6-CD INT	Interruption error of $\overline{CDn}$
7	E7-CS INT	Interruption error of $\overline{CSn}$
8	E8-TXEMP	TXEMPn error
9	E9-TXEMP I	Interruption error of TXEMPn
10	E10-TXRDY	TXRDYn error
11	E11-TXRDY I	Interruption error of TXRDYn
12	E12-RCVRDY	RCVRDYn error (Reception is impossible. TRQ1 has occurred during execution of check ②.)
13	E13-RCVRDY I	Interruption error of RCVRDY
14	E14-SD RD	SDn-RDn ERR (Data error)
15	E15-SD RD	SDn-RDn ERR (Data error, Flaming error)
16	E16-TIMER	TIMERn error ($\overline{TMRQn}$ cannot be set after termination of check ②.)
17	E17-TIMER I	Interruption error of TRQ1

Errors that may occur during check ① (control signal check): E1 ~ E7
Errors that may occur during check ② (data transfer check): E8 ~ E15
Errors that may occur during check ③ (timer check): E12, E16 and E17

④ Cancellation

The program automatically terminates when a check is finished.

Termination print-out:

50n n : 1 ~ 7

III. HARDWARE DESCRIPTION FOR ER-A5RS

1. General

The ER-A5RS is composed of the following blocks:

1) RS-232 receiver (75189A)
2) RS-232 driver (75188)
3) USART (MB89371A)
4) Gate array (OPC1: F256004PJ)

2. Block diagram

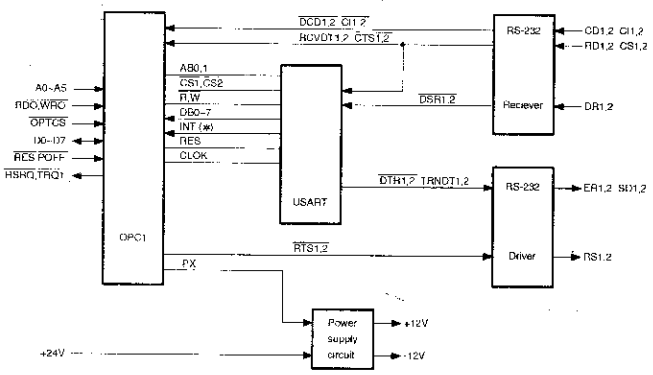

INT (*): TRNRDY1,2 RCVRDY1,2 TRNEMP1,2 BRK1,2

3. Description of main LSI

3-1. OPC1 (F256004PJ)

1) General description

The OPC1 is a gate array of integrated peripheral circuits of RS-232/Simple IRC interface.
One chip of the OPC1 is equipped with four communication circuits. (Three of them are for RS-232 only: UNIT 0 ~ 2, one is for selection of simple IRC/RS-232: UNIT 3)
The ER-A5RS uses UNIT0 (RS-232 interface) and UNIT7 (RS-232 interface).

UNIT NO.	Purpose	ER-A5RS
UNIT0	RS-232	Used.
UNIT1	RS-232	Used.
UNIT2	RS-232	Not used.
UNIT3	RS-232/Simple IRC	Not used.

Each UNIT of the OPC1 has the following functions:

① Timer function
Used for the timer between characters in data reception.

② Address decode
USART chip select output and own select.

③ Interruption control
$\overline{RSRQ}$, $\overline{TRRQ}$ output using outputs from USART (TRNRDY, TRNEMP, RCVRDY, BRK) and RS-232 control signals ($\overline{CI}$, $\overline{CTS}$, $\overline{CD}$) as interruption factors.
(For the simple IRC, TRNEMP is excluded.)

* $\overline{RSRQ}$: For RS-232
$\overline{TRRQ}$(Not used): For simple IRC

④ Simple IRC send/receive control (UNIT3 only) : Not used

2) Pin configuration

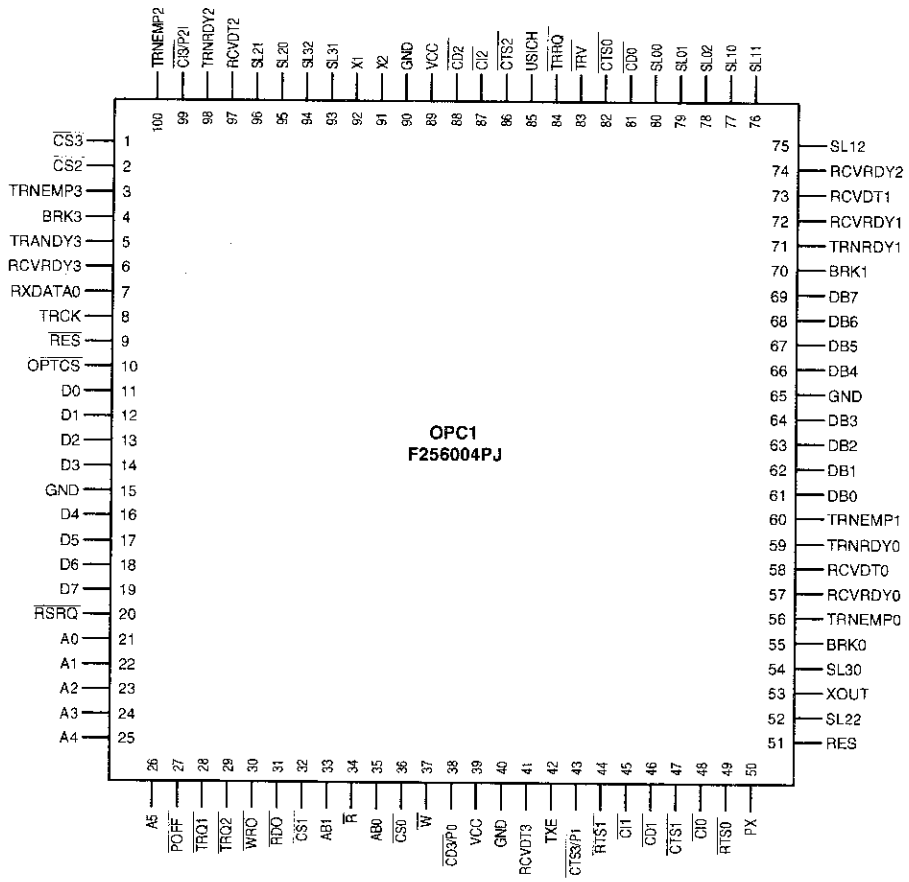

3) Block diagram

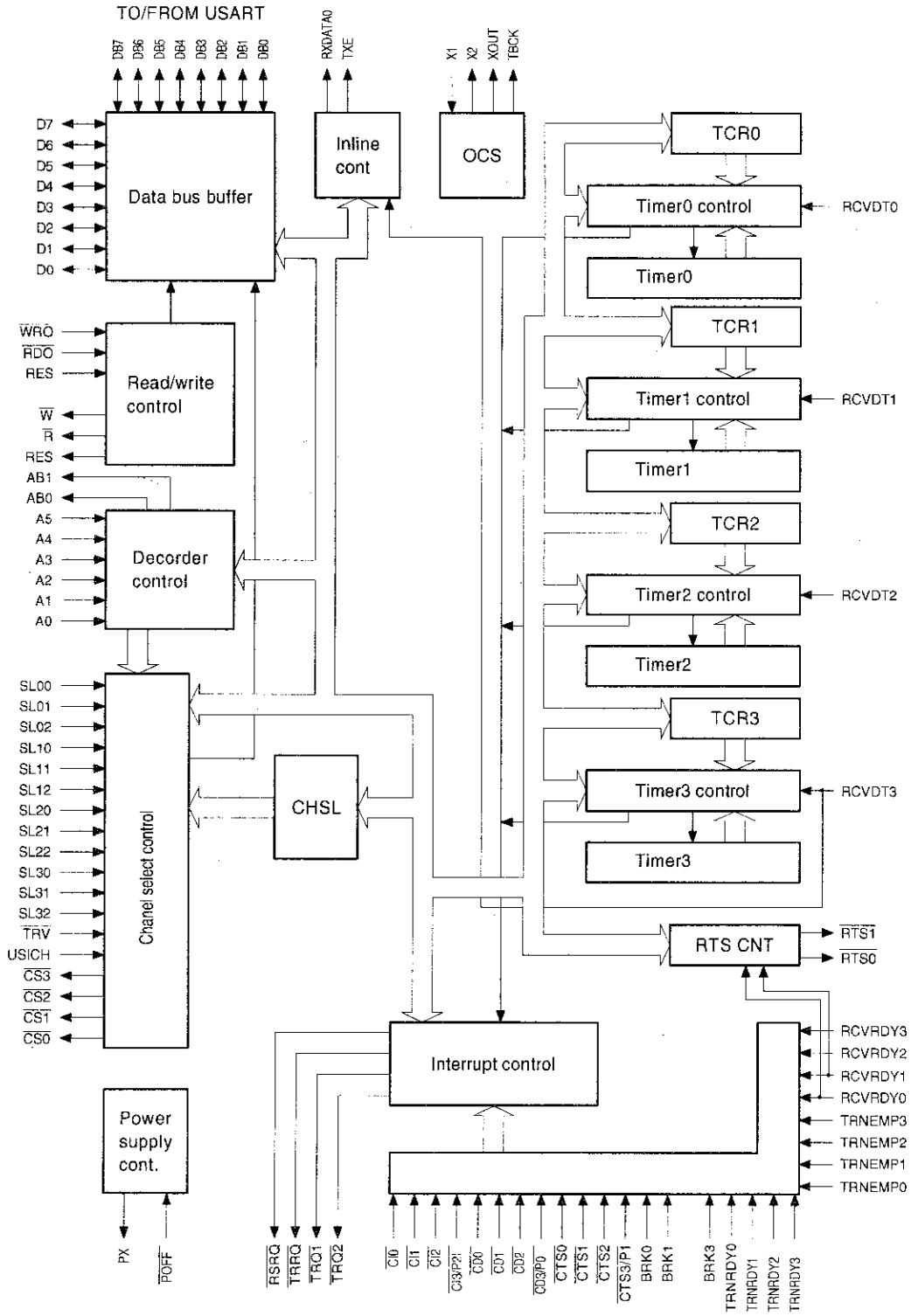

4) Pin description

OPC1 pin table

The signals marked with "-" at the end are LOW active signals. Example: "CS1-" = "$\overline{CS1}$"

No.	Pin No.	Pin name	I/O	Pin	ER-A5RS	Description
1	80	SL00	I	ICU	SL00	RS-232/UNIT0 channel select
2	79	SL01	I	ICU	SL01	
3	78	SL02	I	ICU	SL02	
4	77	SL10	I	ICU	SL10	RS-232/UNIT1 channel select
5	76	SL11	I	ICU	SL11	
6	75	SL12	I	ICU	SL12	
7	95	SL20	I	ICU	GND	RS-232/UNIT2 channel select
8	96	SL21	I	ICU	GND	
9	52	SL22	I	ICU	GND	
10	54	SL30	I	ICU	GND	RS-232/UNIT3 channel select
11	93	SL31	I	ICU	GND	
12	94	SL32	I	ICU	GND	
13	36	CS0-	O	O	CS1-	RS-232 USART chip select
14	32	CS1-	O	O	CS2-	
15	2	CS2-	O	O	NC	
16	1	CS3-	O	O	NC	RS-232/INLINE USART chip select
17	81	CD0-	I	IS	DCD1-	RS-232 control signal CD- input
18	46	CD1-	I	IS	DCD2-	
19	88	CD2-	I	IS	GND	
20	38	CD3-/P0-	I	IS	GND	RS-232 CD-/INLINE P0-
21	82	CTS0-	I	IS	CTS1-	RS-232 control signal CTS- input
22	47	CTS1-	I	IS	CTS2-	
23	86	CTS2-	I	IS	GND	
24	43	CTS3-/P1-	I	IS	GND	RS-232 CTS-/INLINE P1-
25	48	CI0-	I	IS	CI1-	RS-232 control signal CI- input
26	45	CI1-	I	IS	CI2-	
27	87	CI2-	I	IS	GND	
28	99	CI3-/P2I	I	IS	GND	RS-232 CI-/INLINE P2I
29	55	BRK0	I	ISC	BRK1	RS-232 USART BREAK signal
30	70	BRK1	I	ISC	BRK2	
31	27	POFF-	I	IS	POFF-	POFF signal (LOW: P-OFF, HIGH: P-ON)
32	4	BRK3	I	IS	GND	RS-232/INLINE USART BREAK signal
33	57	RCVRDY0	I	ISC	RCVRDY1	RS-232 USART RCVRDY signal
34	72	RCVRDY1	I	ISC	RCVRDY2	
35	74	RCVRDY2	I	ISC	GND	
36	6	RCVRDY3	I	IS	GND	RS-232/INLINE USART RCVRDY signal
37	59	TRNRDY0	I	ISC	TRNRDY1	RS-232 USART TRNRDY signal
38	71	TRNRDY1	I	ISC	TRNRDY2	
39	98	TRNRDY2	I	ISC	GND	
40	5	TRNRDY3	I	IS	GND	RS-232/INLINE USART TRNRDY signal
41	56	TRNEMP0	I	ISC	TRNEMP1	RS-232 USART TRNEMP signal
42	60	TRNEMP1	I	ISC	TRNEMP2	
43	100	TRNEMP2	I	ISC	GND	
44	3	TRNEMP3	I	IS	GND	RS-232/INLINE USART TRNEMP signal
45	58	RCVDT0	I	ISC	RCVDT1	RS-232 RCVDT signal (LOW: TIMER START)
46	73	RCVDT1	I	ISC	RCVDT2	
47	97	RCVDT2	I	ISC	GND	
48	41	RCVDT3	I	IS	GND	RS-232/INLINE RCVDT signal
49	20	RSRQ-	O	3S	RSRQ-	RS-232 IRQ- signal
50	83	TRV-	I	ISC	+5V	INLINE YES/NO
51	7	RXDATA0	O	O	NC	INLINE RXDATA OUT
52	42	TXE	O	O	NC	INLINE TRNS ENABLE
53	84	TRRQ-	O	3S	NC	INLINE IRQ- signal
54	28	TRQ1-	O	3S	$\overline{TRQ1}$	TIMER IRQ signal (RS-232)

No.	Pin No.	Pin name	I/O	Pin	ER-A5RS	Description
55	29	TRQ2-	O	3S	NC	TIMER IRQ signal (INLINE)
56	11	D0	I/O	IOU	D0	DATA BUS (MAIN)
57	12	D1	I/O	IOU	D1	
58	13	D2	I/O	IOU	D2	
59	14	D3	I/O	IOU	D3	
60	16	D4	I/O	IOU	D4	
61	17	D5	I/O	IOU	D5	
62	18	D6	I/O	IOU	D6	
63	19	D7	I/O	IOU	D7	
64	61	DB0	I/O	IOU	DB0	DATA BUS (USART)
65	62	DB1	I/O	IOU	DB1	
66	63	DB2	I/O	IOU	DB2	
67	64	DB3	I/O	IOU	DB3	
68	66	DB4	I/O	IOU	DB4	
69	67	DB5	I/O	IOU	DB5	
70	68	DB6	I/O	IOU	DB6	
71	69	DB7	I/O	IOU	DB7	
72	21	A0	I	I	A0	ADDRESS BUS (MAIN)
73	22	A1	I	I	A1	
74	23	A2	I	I	A2	
75	24	A3	I	I	A3	
76	25	A4	I	I	A4	
77	26	A5	I	I	A5	
78	10	OPTCS-	I	I	OPTCS-	OPTION CHIP SELECT (from MAIN)
79	31	RDO-	I	I	RDO-	READ signal (from MAIN)
80	30	WRO-	I	I	WRO-	WRITE signal (from MAIN)
81	9	RES-	I	IS	RES-	RESET signal (from MAIN)
82	34	R-	O	O	R-	READ signal (To USART)
83	37	W-	O	O	W-	WRITE signal (To USART)
84	51	RES	O	O	RES	RESET signal (To USART)
85	92	X1	O		X1	Oscillation circuit
86	91	X2	I		X2	
87	53	XOUT	O	O	XOUT	Clock for USART
88	8	TRCK	O	O	NC	T/R clock for 1CH USART
89	35	AB0	O	O	AB0	Address bus for USART
90	33	AB1	O	O	AB1	
91	85	USICH	I	ISC	GND	UNIT3 USART 1CH/2CH select
92	50	PX		O	PX	Power source clock
93	39	VCC			+5V	
94	89	VCC			+5V	
95	15	GND			GND	
96	40	GND			GND	
97	65	GND			GND	
98	90	GND			GND	
99	49	RTS0-	O	O	RTS1-	RS-232 control signal RTS- output
100	44	RTS1-	O	O	RTS2-	

ICU : CMOS level input (internal pullup resistor)
O : Output
IS : TTL level input (internal schmit circuit)
ISC : CMOS level input (internal schmit circuit)
3S : Three state output
IOU : I/O port (internal pullup resistor)

3-2. USART (MB89371A)

1) General

The MB89371A (Serial data transmitter/receiver, 2 units) is a versatile-use interface LSI for communication lines, which is equipped with two sets of equivalent units of the MB89251A (serial data transmitter/receiver), the baud rate generating section, and the interruption adjustment section.
It is positioned between the line Modem and the computer, and used for serial/parallel conversion of data, data send/receive operation check, and the synchronization mode selection according to the program assignment.
The transmitter section converts parallel data into serial data, and adds the parity bit, the start bit, and the stop bit to them, and transmits them. In the synchronization mode, it transmits synchronization characters during no transmission data period. In the advancement synchronization mode, it allows selection of transmission clocks and transmission baud rates.
The receiving section converts serial data into parallel data, and checks parities to judge that data are properly transmitted.
In the synchronization mode, it detects synchronization characters and makes synchronization of transmission/reception operations with the transmitter side. In the advancement synchronization mode, it allows selection of transmission clocks and reception baud rates.
The baud rate generating section generates clock pulse signals which are used in transmission and reception and delivered through the baud rate selecting section to the SDTR section.
It provides the loop back diagnostic function which crosses interface lines of the Modem and loops transmission and reception signals, facilitating the operation check.

Features

- Two independent channels of SDTR.
- Built-in baud rate generator which allows setting for each channel
- External clock available
- Internal clock output available.
- Maskable interruption generating circuit
- Two channels are assigned to different address spaces.
- Baud rate DC ~ 240K baud (with external clocks)
- Full duplex communication
- Program assignment in synchronization mode
  - Data bit length: 5 - 8 bits
  - Character synchronization system: internal synchronization, external synchronization
  - Number of synchronized characters: Single character, double characters
  - Parity occurrence and check: parity valid/invalid
    even parity, odd parity
- Operations in the synchronization mode
  - Overrun error and parity error detection
  - Transmit/receive buffer state acknowledgment
  - Synchronization character detection
  - Automatic insertion of synchronization character
- Program assignment function in the advancement synchronization mode
  - Data bit length: 5 ~ 8 bits
  - Stop bit length: 1, 1½, 2 bits
  - Baud rate: Transmission clock, reception clock x 1, x 1/16, x 1/64
  - Parity occurrence and check: Parity valid, invalid
    Even parity, odd parity
- Operations in the advancement synchronization mode
  - Detection of framing error, overrun error, parity error
  - Transmission/reception buffer state acknowledgment
  - Break characters detection
- Error start bit detection
- IBM Bi-sync system operation allowed.
- Duplex buffer system in the transmission and the reception sections.
- Loop back diagnostic functions
- I/O signal level TTL compatible
- Compatible with standard microprocessor in connecting pins and signal timing.
- Standard 42 pin plastic DIP, 48 pin plastic QFP
- +5V single power source

2) Pin configuration

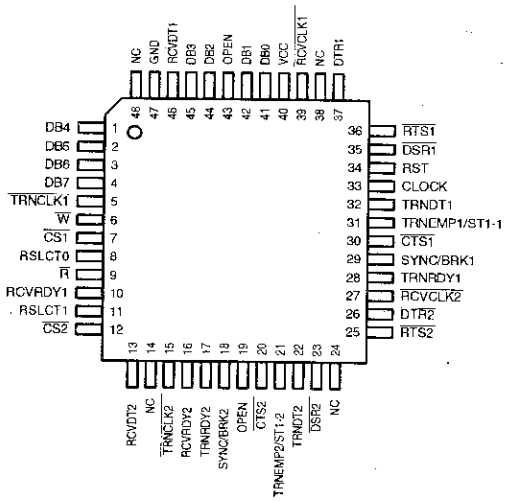

3) Block diagram

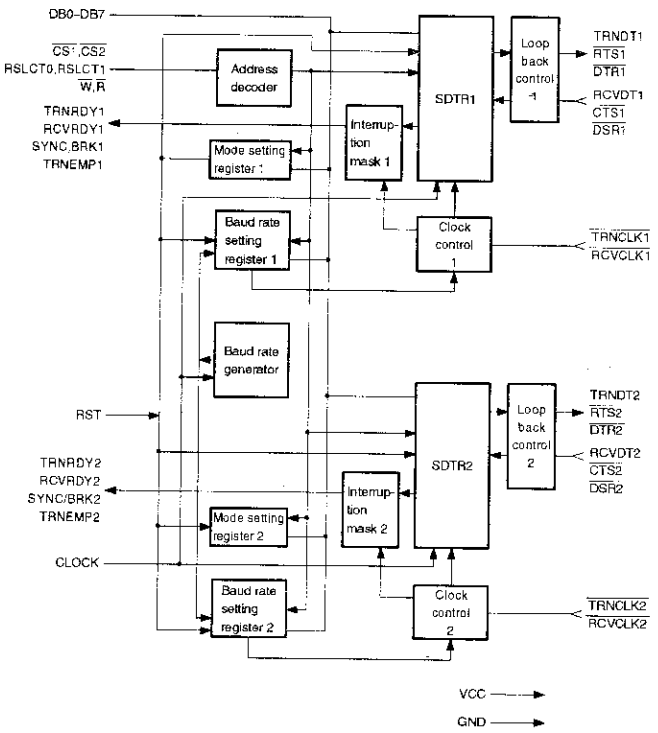

4) Pin description

No.	Pin No.	Pin name	I/O	ER-A5RS	
1	1	DB4	I/O	DB4	Data bus
2	2	DB5	I/O	DB5	
3	3	DB6	I/O	DB6	
4	4	DB7	I/O	DB7	
5	41	DB0	I/O	DB0	
6	42	DB1	I/O	DB1	
7	44	DB2	I/O	DB2	
8	45	DB3	I/O	DB3	
9	46	RCVDT1	I	RCVDT1	RS-232 reception data signal
10	13	RCVDT2	I	RCVDT2	
11	47	GND	–	GND	
12	5	TRNCLK1-	I	GND	Data transmission clock
13	15	TRNCLK2-	I	GND	
14	6	W-	I	W-	Write signal
15	7	CS1-	I	CS1-	RS-232 chip select
16	12	CS2-	I	CS2-	
17	8	RSLCT0	I	AB0	Address bus
18	11	RSLCT1	I	AB1	
19	9	R-	I	R-	Read signal
20	10	RCVRDY1	O	RCVRDY1	RS-232 data reception enable signal
21	16	RCVRDY2	O	RCVRDY2	
22	28	TRNRDY1	O	TRNRDY1	RS-232 data transmission enable signal
23	17	TRNRDY2	O	TRNRDY2	
24	29	BRK1	O	BRK1	Break code detection signal
25	18	BRK2	O	BRK2	
26	30	CTS1-	I	(CTS1-)GND	RS-232 clear to send signal
27	20	CTS2-	I	(CTS2-)GND	
28	31	TRNEMP1	O	TRNEMP1	RS-232 transmission buffer empty signal
29	21	TRNEMP2	O	TRNEMP2	
30	14	NC	–	NC	
31	24	NC	–	NC	
32	38	NC	–	NC	
33	48	NC	–	NC	
34	19	OPEN		NC	
35	43	OPEN		NC	
36	32	TRNDT1	O	TRNDT1	RS-232 transmission data signal
37	22	TRNDT2	O	TRNDT2	
38	35	DSR1-	I	DSR1-	RS-232 data set ready signal
39	23	DSR2-	I	DSR2-	
40	36	RTS1-	O	NC	Request to send signal
41	25	RTS2-	O	NC	
42	37	DTR1-	O	DTR1-	RS-232 data terminal ready signal
43	26	DTR2-	O	DTR1-	
44	39	RCVCLK1-	I	GND	Data reception clock
45	27	RCVCLK2-	I	GND	
46	33	CLOCK	I	CLOCK	Clock signal
47	34	RST	I	RES	RESET signal
48	40	VCC	–	+5V	+5V

4. Power supply circuit

The ER-A570 supplies +5V to +24V, and ±12V is generated from +24V in the DC/DC convertor circuit.

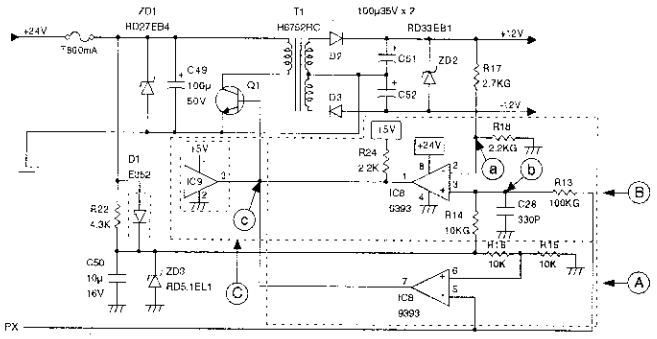

Fig. 4-1

(1) The PX signal from the OPC1 alternately turns on and off the comparator output of IC 8 (pin 7), which causes Q1 to turn on and off. (Circuit Ⓐ)

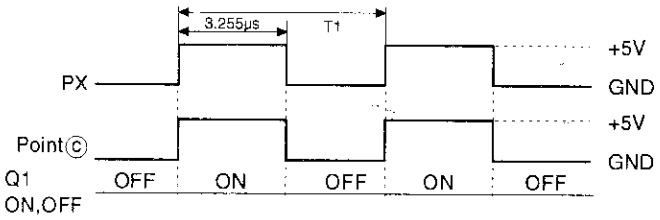

Fig. 4-2

T1: Software starting: 26.04us
Normal operation: 13.02us
* After POFF cancel (Power ON), software start is made for 13.3ms.

Duty (Q1: ON/OFF) : Software strating: 12.5%
Noemalperation : 25%

(2) The potential at point ⓐ is 4.8V when the output voltage is +12V(About +11V). A load fluctuation causes the +12V output to change. At point ⓑ of the comparators (+) side, a triangular waveform appears as shown in Fig. 4-2.

(3) The comparator (IC No. 8...Circuit Ⓑ), the potential at point ⓐ is compared with that of point ⓑ . If the potential at point ⓐ is lower than point ⓑ , Q1 activating time is prolonged to raise the output voltage (by increasing the duty cycle). On the contrary, if the potential at point ⓐ is higher, the transistor activating time is hortened to decrease the output voltage (by decreasing the duty cycle). As Q1 duties cycles are varied by detecting the +12V output fluctuation in the comparator (Circuit Ⓑ), the output voltage is regulated at a constant level.

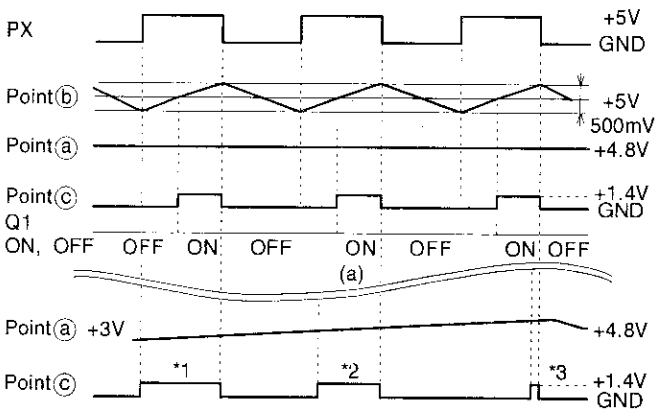

Fig. 4-3

Potential at point a changes according to a fluctuation in the +12V output. Waveform at point a differs depending on the state of +12V output.

(4) The pin 3 output of the IC9 chip at circuit Ⓒ is at a high level when the pin 1 input is at 5V. But, when it drops below 4.5V, the line goes to the GND level. This causes Q1 to turn off so that +12V and 12V are shut off. It is provided for prevention from malfunction in the logic circuit when the +5V supply from malfunction in the logic circuit when the +5V supply from the ER-A550 main frame drops.

* IC9: Not used

5. ER-A5RS channel setting

The ER-A5RS ports can be set to channel 1 - 7 and invalid (inhibit) with SW1 on the PWB.

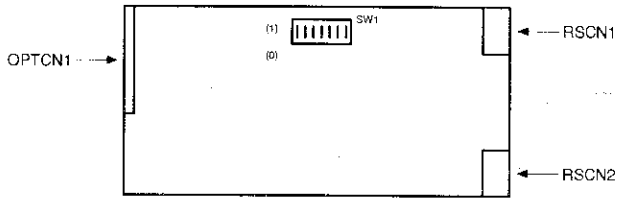

SW1 setting contents
SW1 1~3 are used for channel setting of RS-232 connector 1 (RSCN1).
SW1 4~6 are used for channel setting of RS-232 connector 2 (RSCN2).

SW1			RSCN1 setting
3	2	1	
0	0	0	RS-232 invalid
0	0	1	Channel 1
0	1	0	Channel 2
0	1	1	Channel 3
1	0	0	Channel 4
1	0	1	Channel 5
1	1	0	Channel 6
1	1	1	Channel 7

SW1			RSCN2 setting
6	5	4	
0	0	0	RS-232 invalid
0	0	1	Channel 1
0	1	0	Channel 2
0	1	1	Channel 3
1	0	0	Channel 4
1	0	1	Channel 5
1	1	0	Channel 6
1	1	1	Channel 7

Note
1) If RSCN1 port and RSCN2 port of the ER-A5RS are set to the same channel, RSCN2 port becomes invalid and only RSCN1 is valid.
2) If RSCN of the ER-A5IN and the ER-A5RS connector are set to the same channel, the buses compete and the operation cannot be assured. In addition, it may break the hardware. Never set the two to the same channel. Be sure to set them to different channels or to set invalid.

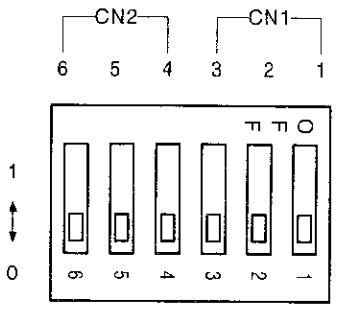

6. Circuit diagram

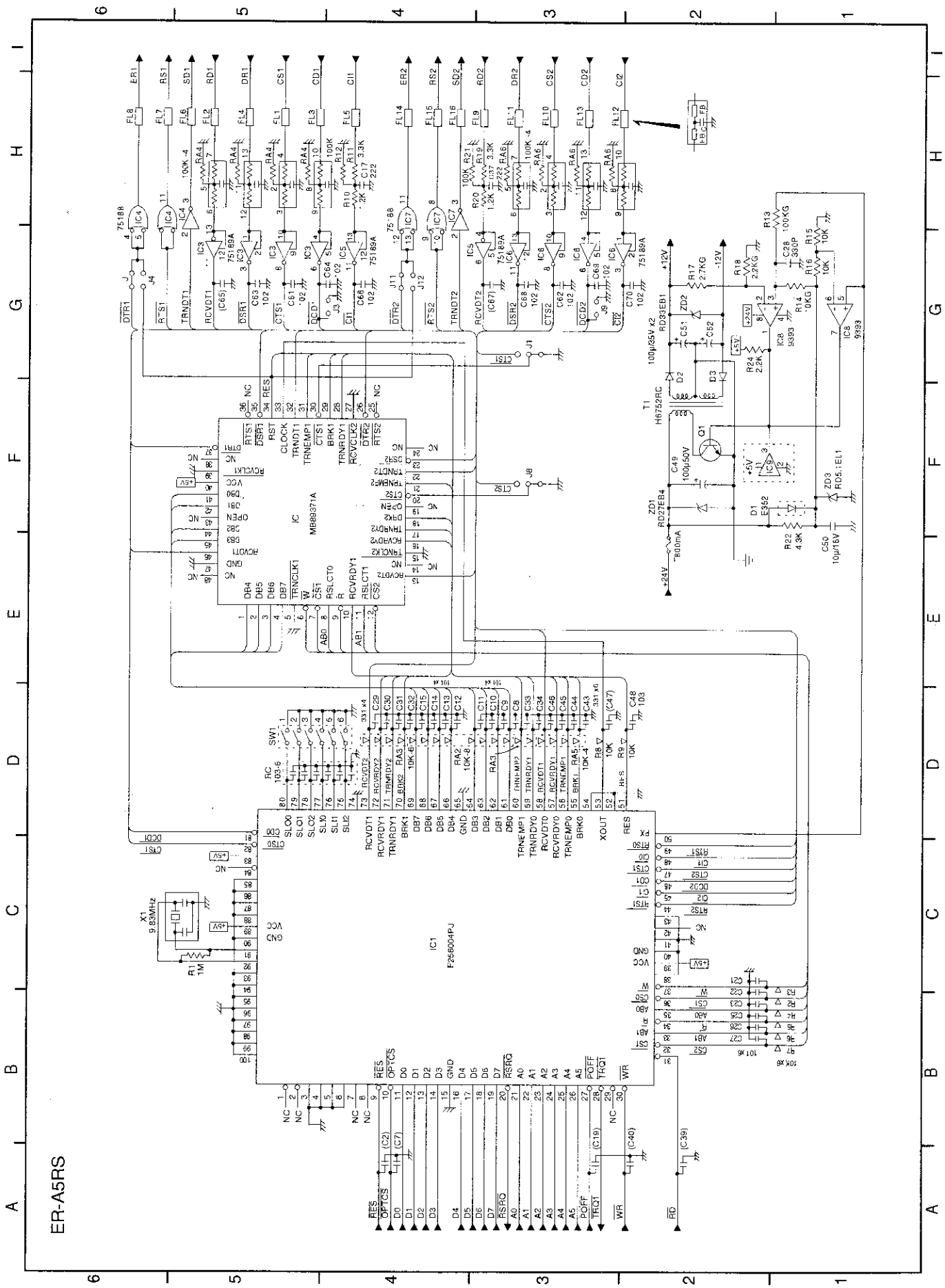

ER-A5RS

OPTCN1

SIGNAL	No.	No.	SIGNAL
GND	1	35	GND
GND	2	36	GND
$\overline{RDO}$	3	37	(ϕ)
$\overline{WRO}$	4	38	(NU1)($\overline{EXWAIT}$)
+5V	5	39	$\overline{BREQ}$
+5V	6	40	$\overline{BACK}$
A23	7	41	$\overline{TRQ2}$
A22	8	42	$\overline{TRQ1}$
A21	9	43	$\overline{EXINT1}$
A20	10	44	$\overline{EXINT0}$
A19	11	45	$\overline{TRRQ}$(NU)
A18	12	46	$\overline{RSRQ}$(IRQ1)
A17	13	47	$\overline{RFSH}$
A16	14	48	$\overline{IPLON}$
A15	15	49	D7
A14	16	50	D6
A13	17	51	D5
A12	18	52	D4
A11	19	53	D3
A10	20	54	D2
A9	21	55	D1
A8	22	56	D0
A7	23	57	$\overline{POFF}$
A6	24	58	VRAM
A5	25	59	(+12V)
A4	26	60	A3
+24V	27	61	+24V
+24V	28	62	+24V
A1	29	63	A2
A0	30	64	$\overline{RES}$
$\overline{RESET}$	31	65	$\overline{AS}$
$\overline{OPTCS}$	32	66	NU2
GNDP	33	67	GND
GNDP	34	68	GND

OPTCN2

SIGNAL	No.	No.	SIGNAL
GND	1	36	GND
GND	2	37	GND
GND	3	38	GND
$\overline{RDO}$	4	39	(ϕ)
$\overline{WRO}$	5	40	NU1
$\overline{BREQ}$	6	41	+5V
$\overline{BACK}$	7	42	+5V
A23	8	43	$\overline{TRQ2}$
A22	9	44	$\overline{TRQ1}$
A21	10	45	$\overline{EXINT1}$
A20	11	46	$\overline{EXINT0}$
A19	12	47	$\overline{TRRQ}$
A18	13	48	$\overline{RSRQ}$
A17	14	49	$\overline{RFSH}$
A16	15	50	$\overline{IPLON}$
A15	16	51	D7
A14	17	52	D6
A13	18	53	D5
A12	19	54	D4
A11	20	55	D3
A10	21	56	D2
A9	22	57	D1
A8	23	58	D0
A7	24	59	$\overline{POFF}$
A6	25	60	VRAM
A5	26	61	A3
A4	27	62	(+12V)
+24V	28	63	+24V
+24V	29	64	+24V
A1	30	65	A2
A0	31	66	$\overline{RES}$
$\overline{RESET}$	32	67	$\overline{AS}$
$\overline{OPTCS}$	33	68	NU2
GNDP	34	69	GND
GNDP	35	70	GND

RSCN1

No.	SIGNAL
1	CD1
2	RD1
3	SD1
4	ER1
5	GND
6	DR1
7	RS1
8	CS1
9	CI1

RSCN2

No.	SIGNAL
1	CD2
2	RD2
3	SD2
4	ER2
5	GND
6	DR2
7	RS2
8	CS2
9	CI2

7. PWB layout

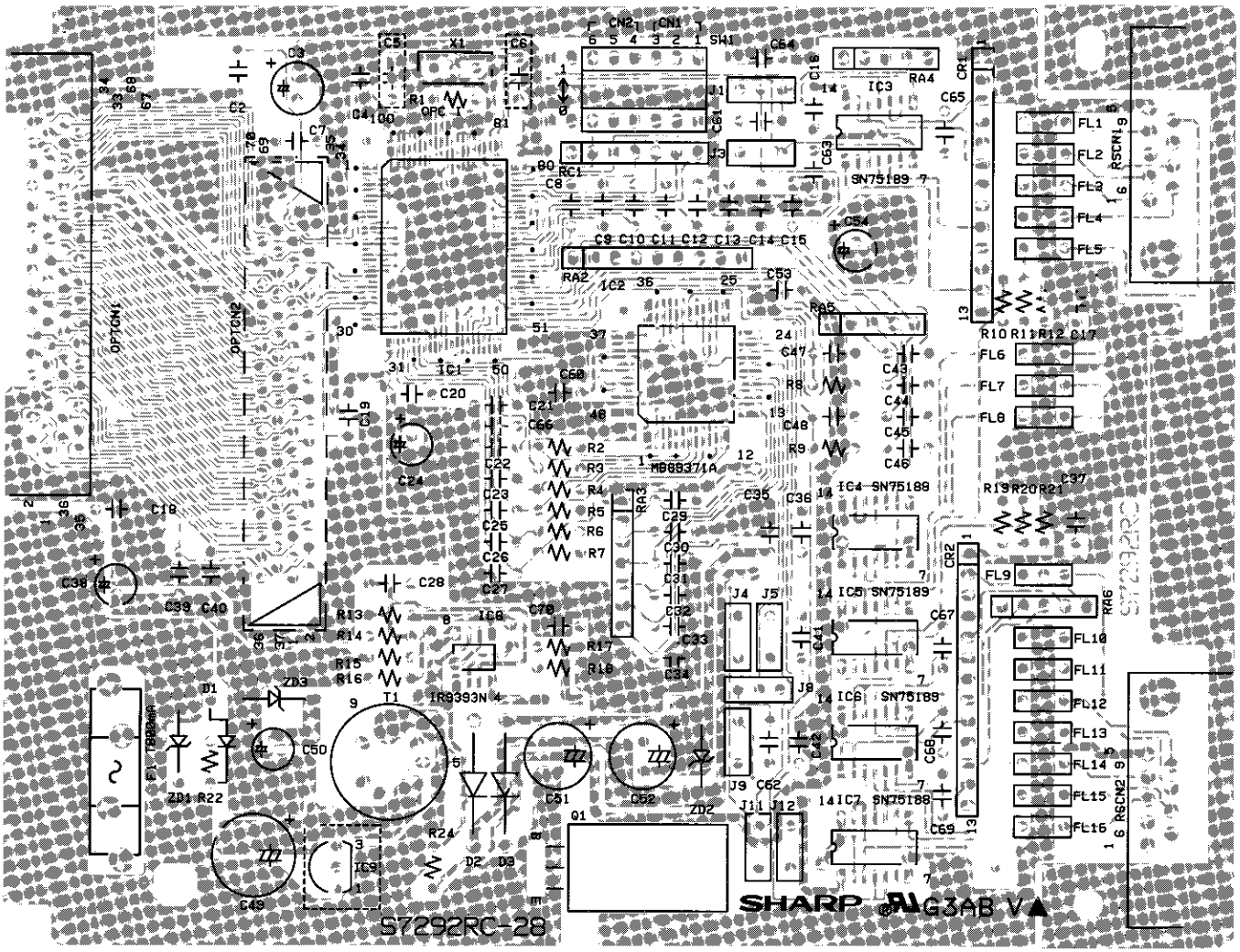
S7292RC-28
SHARP
G3AB V
IC3 SN75189
IC4 SN75189
IC5 SN75189
IC6 SN75189
IC7 SN75188
IC1 MB89371A
IC8 IR9393N
OPTCN1
OPTCN2
RSCN1
RSCN2
SW1
CN1
CN2
X1
Q1
T1
ZD1
ZD2
ZD3
D1
D2
D3
FL1
FL2
FL3
FL4
FL5
FL6
FL7
FL8
FL9
FL10
FL11
FL12
FL13
FL14
FL15
FL16

1 [ER-A5RS] Packing material & Accessories

NO.	PARTS CODE	PRICE RANK	NEW MARK	PART RANK	DESCRIPTION
1	LBNDJ2004SCZZ	AA		C	Wire band (PLT−1.5I)
2	LHLDW6814RCZZ	AE		C	FG clamp
3	LX−BZ6774RCZZ	AA		C	Screw (4×6S)
4	PCUS−6653RCZZ	AS		C	Cushion for PWB protect
5	PSPAN7039XCZZ	AB		C	Spacer (WLS−10−0)
6	RCORF6658RCZZ	AK		C	Core (TFC−16−8−16)
7	SPAKC7139RCZZ	AH		D	Packing case
8	SSAKA0001SCZZ	AA		D	Vinyl bag (200×300mm)
9	SSAKA0006UCZZ	AA		D	Vinyl bag (50mm×60mm)
10	XHBSD30P08000	AA		C	Screw (3×8)

2 [ER-A5RS] RS232C I/F PWB unit

NO.	PARTS CODE	PRICE RANK	NEW MARK	PART RANK	DESCRIPTION	
1	RC−EZ106ARC1C	AD		C	Capacitor (16WV 10μF)	[C3]
2	RC−KZ1054CCN2	AB		C	Capacitor (0.1μF)	[C4]
3	VCKYPU1HB101K	AA		C	Capacitor (50WV 100pF)	[C8]
4	VCKYPU1HB101K	AA		C	Capacitor (50WV 100pF)	[C9]
5	VCKYPU1HB101K	AA		C	Capacitor (50WV 100pF)	[C10]
6	VCKYPU1HB101K	AA		C	Capacitor (50WV 100pF)	[C11]
7	VCKYPU1HB101K	AA		C	Capacitor (50WV 100pF)	[C12]
8	VCKYPU1HB101K	AA		C	Capacitor (50WV 100pF)	[C13]
9	VCKYPU1HB101K	AA		C	Capacitor (50WV 100pF)	[C14]
10	VCKYPU1HB101K	AA		C	Capacitor (50WV 100pF)	[C15]
11	RC−KZ1054CCN2	AB		C	Capacitor (0.1μF)	[C16]
12	VCKYPU1HB222K	AA		C	Capacitor (50WV 2200PF)	[C17]
13	RC−KZ1054CCN2	AB		C	Capacitor (0.1μF)	[C18]
14	RC−KZ1054CCN2	AB		C	Capacitor (0.1μF)	[C20]
15	VCKYPU1HB101K	AA		C	Capacitor (50WV 100pF)	[C21]
16	VCKYPU1HB101K	AA		C	Capacitor (50WV 100pF)	[C22]
17	VCKYPU1HB101K	AA		C	Capacitor (50WV 100pF)	[C23]
18	VCEAEU1CW106M	AA		C	Capacitor (16WV 10μF)	[C24]
19	VCKYPU1HB101K	AA		C	Capacitor (50WV 100pF)	[C25]
20	VCKYPU1HB101K	AA		C	Capacitor (50WV 100pF)	[C26]
21	VCKYPU1HB101K	AA		C	Capacitor (50WV 100pF)	[C27]
22	VCCSPA1HL331J	AA		C	Capacitor (50WV 330PF)	[C28]
23	VCKYPU1HB331K	AA		C	Capacitor (50WV 330PF)	[C29]
24	VCKYPU1HB331K	AA		C	Capacitor (50WV 330PF)	[C30]
25	VCKYPU1HB331K	AA		C	Capacitor (50WV 330PF)	[C31]
26	VCKYPU1HB331K	AA		C	Capacitor (50WV 330PF)	[C32]
27	VCKYPU1HB331K	AA		C	Capacitor (50WV 330PF)	[C33]
28	VCKYPU1HB331K	AA		C	Capacitor (50WV 330PF)	[C34]
29	RC−KZ1054CCN2	AB		C	Capacitor (0.1μF)	[C35]
30	RC−KZ1054CCN2	AB		C	Capacitor (0.1μF)	[C36]
31	VCKYPU1HB222K	AA		C	Capacitor (50WV 2200PF)	[C37]
32	VCEAEU1CW106M	AA		C	Capacitor (16WV 10μF)	[C38]
33	RC−KZ1054CCN2	AB		C	Capacitor (0.1μF)	[C41]
34	RC−KZ1054CCN2	AB		C	Capacitor (0.1μF)	[C42]
35	VCKYPU1HB331K	AA		C	Capacitor (50WV 330PF)	[C43]
36	VCKYPU1HB331K	AA		C	Capacitor (50WV 330PF)	[C44]
37	VCKYPU1HB331K	AA		C	Capacitor (50WV 330PF)	[C45]
38	VCKYPU1HB331K	AA		C	Capacitor (50WV 330PF)	[C46]
39	VCKYPU1HF103Z	AA		C	Capacitor (50WV 0.010μF)	[C48]
40	VCEA2U1HW107M	AC		C	Capacitor (50WV 100μF)	[C49]
41	VCEAEU1CW106M	AA		C	Capacitor (16WV 10μF)	[C50]
42	VCEA2U1VW107M	AB		C	Capacitor (35WV 100μF)	[C51]
43	VCEA2U1VW107M	AB		C	Capacitor (35WV 100μF)	[C52]
44	RC−KZ1054CCN2	AB		C	Capacitor (0.1μF)	[C53]
45	VCEAEU1CW106M	AA		C	Capacitor (16WV 10μF)	[C54]
46	RC−KZ1054CCN2	AB		C	Capacitor (0.1μF)	[C60]
47	VCKYPU1HB102K	AA		C	Capacitor (50WV 0.001μF)	[C61]
48	VCKYPU1HB102K	AA		C	Capacitor (50WV 0.001μF)	[C62]
49	VCKYPU1HB102K	AA		C	Capacitor (50WV 0.001μF)	[C63]
50	VCKYPU1HB102K	AA		C	Capacitor (50WV 0.001μF)	[C64]
51	VCKYPU1HB102K	AA		C	Capacitor (50WV 0.001μF)	[C66]
52	VCKYPU1HB102K	AA		C	Capacitor (50WV 0.001μF)	[C68]
53	VCKYPU1HB102K	AA		C	Capacitor (50WV 0.001μF)	[C69]

2 [ER-A5RS] RS232C I/F PWB unit

NO.	PARTS CODE	PRICE RANK	NEW MARK	PART RANK	DESCRIPTION	
54	VCKYPU1HB102K	AA		C	Capacitor (50WV 0.001μF)	[C70]
55	RMPTA2314RCZZ	AG		B	Block C/R (22KΩ×4)	[CR1]
56	RMPTA2314RCZZ	AG		B	Block C/R (22KΩ×4)	[CR2]
57	VHDEK04////-1	AD		B	Diode (EK04)	[D2]
58	VHDEK04////-1	AD		B	Diode (EK04)	[D3]
⚠ 59	QFS-A0036HCZZ	AD		A	Fuse (800mA MINI TYPE)	[F1]
60	QFSHA1002CCZZ	AB		C	Fuse holder (MINI TYPE)	[F1]
61	RFiLN6012RCZZ	AB		C	EMI filter (E103)	[FL1]
62	RFiLN6012RCZZ	AB		C	EMI filter (E103)	[FL2]
63	RFiLN6012RCZZ	AB		C	EMI filter (E103)	[FL3]
64	RFiLN6012RCZZ	AB		C	EMI filter (E103)	[FL4]
65	RFiLN6012RCZZ	AB		C	EMI filter (E103)	[FL5]
66	RFiLN6012RCZZ	AB		C	EMI filter (E103)	[FL6]
67	RFiLN6012RCZZ	AB		C	EMI filter (E103)	[FL7]
68	RFiLN6012RCZZ	AB		C	EMI filter (E103)	[FL8]
69	RFiLN6012RCZZ	AB		C	EMI filter (E103)	[FL9]
70	RFiLN6012RCZZ	AB		C	EMI filter (E103)	[FL10]
71	RFiLN6012RCZZ	AB		C	EMI filter (E103)	[FL11]
72	RFiLN6012RCZZ	AB		C	EMI filter (E103)	[FL12]
73	RFiLN6012RCZZ	AB		C	EMI filter (E103)	[FL13]
74	RFiLN6012RCZZ	AB		C	EMI filter (E103)	[FL14]
75	RFiLN6012RCZZ	AB		C	EMI filter (E103)	[FL15]
76	RFiLN6012RCZZ	AB		C	EMI filter (E103)	[FL16]
77	VHiF256004PJ1	AG		B	IC (F256004PJ1)	[IC1]
78	VHiMB89371APF	AW		B	IC (MB89371APF-G-BND)	[IC2]
79	VHiSN75189ANS	AE		B	IC (SN75189ANS)	[IC3]
80	VHiSN75188NS1	AE		B	IC (SN75188NS1)	[IC4]
81	VHiSN75189ANS	AE		B	IC (SN75189ANS)	[IC5]
82	VHiSN75189ANS	AE		B	IC (SN75189ANS)	[IC6]
83	VHiSN75188NS1	AE		B	IC (SN75188NS1)	[IC7]
84	VHiiR9393N/-1	AD		B	IC (IR9393N)	[IC8]
85	QCNCW7074RC6H	AQ		C	Connector (68pin)	[OPTCN1]
86	QCNCM7065RC7J	AM		C	Connector (70pin)	[OPTCN2]
87	VRD-RC2EY105J	AA		C	Resistor (1/4W 1.0MΩ ±5%)	[R1]
88	VRD-RC2EY103J	AA		C	Resistor (1/4W 10KΩ ±5%)	[R2]
89	VRD-RC2EY103J	AA		C	Resistor (1/4W 10KΩ ±5%)	[R3]
90	VRD-RC2EY103J	AA		C	Resistor (1/4W 10KΩ ±5%)	[R4]
91	VRD-RC2EY103J	AA		C	Resistor (1/4W 10KΩ ±5%)	[R5]
92	VRD-RC2EY103J	AA		C	Resistor (1/4W 10KΩ ±5%)	[R6]
93	VRD-RC2EY103J	AA		C	Resistor (1/4W 10KΩ ±5%)	[R7]
94	VRD-RC2EY103J	AA		C	Resistor (1/4W 10KΩ ±5%)	[R8]
95	VRD-RC2EY103J	AA		C	Resistor (1/4W 10KΩ ±5%)	[R9]
96	VRD-RC2EY122J	AA		C	Resistor (1/4W 1.2KΩ ±5%)	[R10]
97	VRD-RC2EY332J	AA		C	Resistor (1/4W 3.3KΩ ±5%)	[R11]
98	VRD-RC2EY104J	AA		C	Resistor (1/4W 100KΩ ±5%)	[R12]
99	VRD-RC2EY104G	AA		C	Resistor (1/4W 100KΩ ±2%)	[R13]
100	VRD-RC2EY103G	AA		C	Resistor (1/4W 10KΩ ±2%)	[R14]
101	VRD-RC2EY103J	AA		C	Resistor (1/4W 10KΩ ±5%)	[R15]
102	VRD-RC2EY103J	AA		C	Resistor (1/4W 10KΩ ±5%)	[R16]
103	VRD-RC2EY272G	AA		C	Resistor (1/4W 2.7KΩ ±2%)	[R17]
104	VRD-RC2EY222G	AA		C	Resistor (1/4W 2.2KΩ ±2%)	[R18]
105	VRD-RC2EY332J	AA		C	Resistor (1/4W 3.3KΩ ±5%)	[R19]
106	VRD-RC2EY122J	AA		C	Resistor (1/4W 1.2KΩ ±5%)	[R20]
107	VRD-RC2EY104J	AA		C	Resistor (1/4W 100KΩ ±5%)	[R21]
108	VRD-RC2EY432J	AA		C	Resistor (1/4W 4.3KΩ ±5%)	[R22]
109	VRD-RC2EY222J	AA		C	Resistor (1/4W 2.2KΩ ±5%)	[R24]
110	RMPTC8103QCKB	AD		B	Block resistor (10KΩ×8 1/8W ±10%)	[RA2]
111	RMPTC6103QCKB	AC		B	Block resistor (10KΩ×6 1/8W ±10%)	[RA3]
112	RMPTC4104QCKB	AC		B	Block resistor (100KΩ×4 1/8W ±10%)	[RA4]
113	RMPTC4103QCKB	AC		B	Block resistor (10KΩ×4 1/8W ±10%)	[RA5]
114	RMPTC4104QCKB	AC		B	Block resistor (100KΩ×4 1/8W ±10%)	[RA6]
115	RMPTE6102RCHZ	AD		B	Block capacitor (1000pF×6)	[RC1]
116	QCNCM7070RC0i	AK		C	Connector (9pin)	[RSCN1]
117	QCNCM7070RC0i	AK		C	Connector (9pin)	[RSCN2]
118	QSW-D0239FCZZ	AM		B	Dip switch	[SW1]
119	RTRNH6752RCZZ	AF		B	Converter transformer	[T1]
120	VS2SC4352//-1	AF		B	Transistor (2SC4352)	[TR1]
121	XBPSD30P10ES0	AA		C	Screw (3×16ES)	[TR1]
122	XNESD30-24000	AA		C	Nut (3NS)	[TR1]
123	RCRSZ6662RCZZ	AE		B	Crystal (9.83MHz)	[X1]
124	VHERD27EB4/-1	AB		B	Zener diode (RD27EB4)	[ZD1]
125	VHERD33EB1/-1	AB		B	Zener diode (RD33EB1)	[ZD2]
126	VHERD5.1EL1-1	AB		B	Zener diode (RD5.1EL1)	[ZD3]
501	LANGT7466RCZZ	AH		C	PWB angle A	
502	LX-BZ6665RCZZ	AA		C	Screw (3×6)	
	(Unit)					
901	CPWBS7292RC01	CA		E	RS232C I/F PWB unit	(except №501,502)